PERMIT SITE PLAN

39 WEST STREET
MEDWAY, MASSACHUSETTS 02053

FOR

STEVEN BRODY

PROJECT TEAM

CIVIL ENGINEERS/
LAND SURVEYORS:

HANCOCK ASSOCIATES, INC.
315 ELM STREET
MARLBOROUGH, MASSACHUSETTS 01752

ARCHITECTS:

COLWELL GROUP
132 CENTRAL STREET, SUITE 203
FOXBOROUGH, MASSACHUSETTS 02035

LANDSCAPE ARCHITECTS:

JAMES K. EMMANUEL ASSOCIATES
22 CARLTON ROAD
MARBLEHEAD, MASSACHUSETTS 01945

OWNER/APPLICANT:

STEVEN GREGORY BRODY
39 WEST STREET
MEDWAY, MASSACHUSETTS 02053

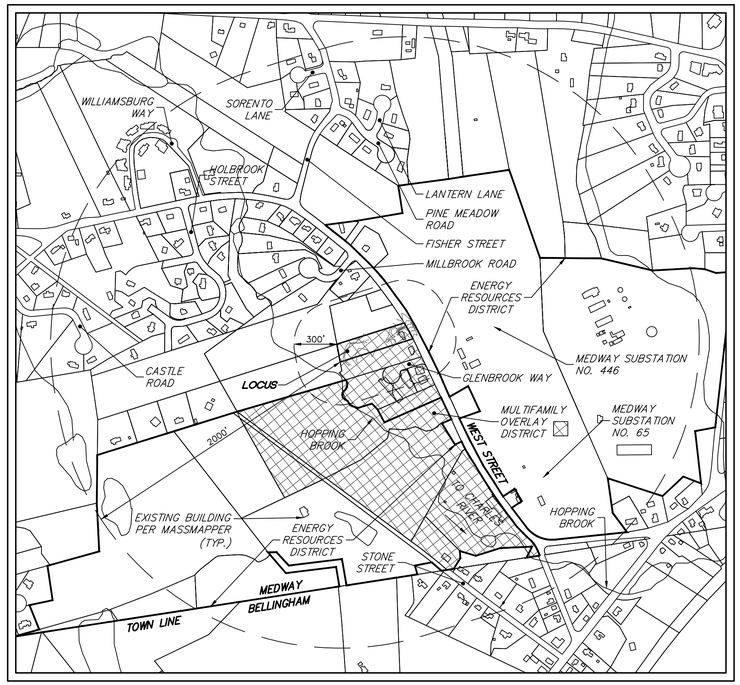

LOCUS PLAN

SCALE: 1"=500'

SHEET INDEX

300' ABUTTERS LIST

WEST STREET
#45 WEST STREET – MAP 55, PARCEL 48
OWNER: BOSTON EDISON CO, NSTAR SERVICES CO/PROP TAX DEP
#45 WEST STREET – MAP 55, PARCEL 47
OWNER: BOSTON EDISON CO, NSTAR SERVICES CO/PROP TAX DEP
#45 WEST STREET – MAP 55, PARCEL 52
OWNER: BOSTON EDISON CO, NSTAR SERVICES CO/PROP TAX DEP
#43 WEST STREET – MAP 55, PARCEL 49
OWNER: BOSTON EDISON CO, NSTAR SERVICES CO/PROP TAX DEP
#41R WEST STREET – MAP 65, PARCEL 23
OWNER: ROCHE'S BUILDING CO., INC. C/O THOMAS J ROCHE
#41 WEST STREET – MAP 55, PARCEL 50
OWNER: BOSTON EDISON CO, NSTAR SERVICES CO/PROP TAX DEP
#29 WEST STREET – MAP 65, PARCEL 27
OWNER: NEW ENGLAND POWER COMPANY, PROPERTY TAX DEPT.
#37 WEST STREET – MAP 65, PARCEL 24
OWNER: GBW SENIOR APARTMENTS LLC
#33 WEST STREET – MAP 66, PARCEL 1
OWNER: GLEN BROOK WAY APARTMENTS LLC, ATTN: MANAGEMENT OFFICE
#33 WEST STREET – MAP 66, PARCEL 2
OWNER: GLEN BROOK WAY APARTMENTS LLC
#34 WEST STREET – MAP 66, PARCEL 12
OWNER: CONSTELLATION WEST MEDWAY LLC

PERMIT
SITE
PLAN

39 West Street
Medway, MA 02053

ASSESSORS:

MAP	PARCEL
55	51

PREPARED FOR:

STEVEN G.
BRODY

39 West Street
Medway, MA 02053

HANCOCK
ASSOCIATES

Civil Engineers

Land Surveyors

Wetland Scientists

315 ELM STREET, MARLBOROUGH, MA 01752
VOICE (508) 460–1111, FAX (508) 460–1121
WWW.HANCOCKASSOCIATES.COM

COMMONWEALTH OF MASSACHUSETTS
JOSEPH D. PEZNOLA
CIVIL
No. 38117
REGISTERED PROFESSIONAL ENGINEER

Digitally signed by Joseph D. Peznola
DN: c=US, st=MA, l=Marlborough, o=Hancock Associates, cn=Joseph D. Peznola, e=jpeznola@hancockassociates.com
Reason: I am the author of this document
Date: 2025.08.15 08:40:42 -04'00'

Joseph D. Peznola P.E.

NO.	BY	APP	DATE	ISSUE/REVISION DESCRIPTION

DATE:	8/15/25	DESIGN BY:	DJR
SCALE:	AS NOTED	DRAWN BY:	DJR
APPRVD. BY:	JP	CHECK BY:	BGG

TITLE SHEET

PLOT DATE: Aug 15, 2025 8:17 am
Path: V:\Jobs\25\25 30 Projects\25337B - Brody - Medway\Dwg\PWD\

DWG:	25337SP.dwg
LAYOUT:	1TS
SHEET:	1 OF 13

TS

PROJECT NO.: 25337

PLAN INTENT

1. THE INTENT OF THIS PLAN IS TO SHOW A 24-UNIT RESIDENTIAL LAND DEVELOPMENT.

2. SAID PROPERTY IS LOCATED WITHIN THE MULTIFAMILY OVERLAY DISTRICT. THE PROPOSED DEVELOPMENT IS INTENDED TO FOLLOW THE DESIGN GUIDELINES OUTLINED IN SECTION 7 OF THE TOWN OF MEDWAY ZONING BYLAW.

ZONING

AGRICULTURAL RESIDENTIAL (AR-2)
MULTIFAMILY OVERLAY DISTRICT (MOD)

ASSESSORS

MAP 55, LOT 51

REFERENCES:

DEED BOOK 37060, PAGE 585
PLAN 284 OF 1951
PLAN 934 OF 1969
LAND COURT PLAN 12715C
1929 LAYOUT OF WEST STREET

RECORD OWNER:

STEVEN GREGORY BRODY
39 WEST STREET
MEDWAY, MA 02053

SURVEY NOTES

1) THE VERTICAL DATUM FOR THIS SURVEY IS THE NORTH AMERICAN VERTICAL DATUM OF 1988 (NAVD88). SAID DATUM WAS ESTABLISHED VIA GPS OBSERVATIONS UTILIZING NAD83 (NA2011) EPOCH 2010.00 (MYCS2) AND GEOID 18.

2) UNDERGROUND UTILITIES SHOWN HEREON ARE COMPILED FROM FIELD LOCATIONS OF STRUCTURES AND FROM AVAILABLE RECORD INFORMATION ON FILE AT THE TOWN ENGINEERING OFFICES, TOWN D.P.W., MASS HIGHWAY DEPT. AND UTILITY COMPANIES. OTHER UNDERGROUND UTILITIES MAY EXIST. IT SHALL BE THE RESPONSIBILITY OF THE CONTRACTOR TO VERIFY THE LOCATION, SIZE & ELEVATION OF ALL UTILITIES WITHIN THE AREA OF PROPOSED WORK AND TO CONTACT "DIG-SAFE" AT 1-888-344-7233 AT LEAST 72 HOURS PRIOR TO ANY EXCAVATION, DEMOLITION OR CONSTRUCTION.

3) THE LOCATION OF UNDERGROUND STORAGE TANKS, IF ANY, ARE UNKNOWN.

4) THIS TOPOGRAPHIC SURVEY WAS PREPARED TO MEET NATIONAL MAP ACCURACY STANDARDS AT A SCALE OF 1"=20' HORIZONTALLY AND A 1 FOOT CONTOUR INTERVAL VERTICALLY. ANY REPRODUCTIONS OR RE-SCALING MAY EFFECT THE MAP ACCURACY.

5) WETLAND AND RIVERFRONT FLAGS SHOWN HEREON DELINEATED BY THREE OAKS ENVIRONMENTAL AND FIELD LOCATED BY HANCOCK ASSOCIATES.

GENERAL NOTES

1. LOCATIONS OF EXISTING UNDERGROUND UTILITIES/OBSTRUCTIONS/SYSTEMS SHOWN HEREON ARE APPROXIMATE ONLY. ALL UTILITIES/OBSTRUCTIONS/SYSTEMS MAY NOT BE SHOWN. CONTRACTOR SHALL BE RESPONSIBLE FOR LOCATING AND PROTECTING ALL UNDERGROUND UTILITIES/OBSTRUCTIONS/SYSTEMS, WHETHER OR NOT SHOWN HEREON.

2. UNLESS OTHERWISE SHOWN, ALL NEW UTILITIES SHALL BE UNDERGROUND.

3. CONTRACTOR SHALL FURNISH CONSTRUCTION LAYOUT OF BUILDING AND SITE IMPROVEMENTS. THIS WORK SHALL BE PERFORMED BY A PROFESSIONAL LAND SURVEYOR.

4. SAFETY MEASURES, CONSTRUCTION METHODS AND CONTROL OF WORK SHALL BE RESPONSIBILITY OF CONTRACTOR.

5. CONTRACTOR SHALL BE RESPONSIBLE FOR REPAIR AND/OR REPLACEMENT OF ANY EXISTING IMPROVEMENTS DAMAGED DURING CONSTRUCTION THAT ARE NOT DESIGNATED FOR DEMOLITION AND/OR REMOVAL HEREON. DAMAGED IMPROVEMENTS SHALL BE REPAIRED TO THE SATISFACTION OF THEIR RESPECTIVE OWNERS.

6. THIS PLAN IS NOT INTENDED TO SHOW AN ENGINEERED BUILDING FOUNDATION DESIGN, WHICH WOULD INCLUDE DETAILS AND FINAL ELEVATIONS OF FOOTINGS, WALLS AND SUBSURFACE DRAINAGE TO PREVENT INTERIOR FLOODING. SEE ARCHITECTURAL AND/OR STRUCTURAL DRAWINGS.

7. ANY INTENDED REVISION OF THE HORIZONTAL AND/OR VERTICAL LOCATION OF IMPROVEMENTS TO BE CONSTRUCTED AS SHOWN HEREON SHALL BE REVIEWED AND APPROVED BY ENGINEER PRIOR TO IMPLEMENTATION.

8. RIM ELEVATIONS SHOWN FOR NEW STRUCTURES ARE APPROXIMATE AND ARE PROVIDED TO ASSIST CONTRACTOR WITH MATERIAL TAKEOFFS. FINISH RIM ELEVATIONS SHOULD MATCH PAVEMENT, GRADING OR LANDSCAPING, UNLESS SPECIFICALLY INDICATED OTHERWISE.

9. WHERE EXISTING UTILITY LINES/STRUCTURES ARE TO BE CUT/BROKEN DOWN/ABANDONED, LINES/STRUCTURES SHALL BE PLUGGED/CAPPED/FILLED IN ACCORDANCE WITH OWNER REQUIREMENTS.

10. THE CONTRACTOR SHALL VERIFY THE LOCATION AND RELATIVE ELEVATION OF BENCH MARKS PRIOR TO COMMENCEMENT OF CONSTRUCTION. ANY DISCREPANCY SHALL BE REPORTED TO THE ENGINEER.

11. PROPOSED BUILDING FOUNDATION CONFIGURATION AND LOCATION ON THE LOT AS SHOWN ARE CONCEPTUAL AND SHALL BE VERIFIED AS TO CONFORMANCE WITH FINAL ARCHITECTURAL PLANS AND ZONING ORDINANCES PRIOR TO CONSTRUCTION.

12. SILT FENCE SHOWN HEREON SHALL BE INSTALLED BEFORE ANY EARTH OR TREE DISTURBANCE OCCURS.

REGULATORY NOTES

1. CONTRACTOR SHALL CONTACT DIG-SAFE FOR UNDERGROUND UTILITY MARKING AT 1-888-344-7233 AT LEAST 72 HOURS PRIOR TO COMMENCEMENT OF ANY WORK.

2. CONTRACTOR SHALL MAKE HIMSELF AWARE OF ALL CONSTRUCTION REQUIREMENTS, CONDITIONS, AND LIMITATIONS IMPOSED BY PERMITS AND APPROVALS ISSUED BY REGULATORY AUTHORITIES PRIOR TO COMMENCEMENT OF ANY WORK. CONTRACTOR SHALL COORDINATE AND OBTAIN ALL CONSTRUCTION PERMITS REQUIRED BY REGULATORY AUTHORITIES.

3. ALL WORK OUTSIDE OF BUILDING THAT IS LESS THAN 10 FEET FROM THE INSIDE FACE OF BUILDING FOUNDATIONS SHALL CONFORM WITH THE UNIFORM STATE PLUMBING CODE OF MASSACHUSETTS, 248 CMR 2.00.

LEGEND

EXISTING		PROPOSED
WV W 6"CI	WATER MAIN WITH SIZE, TEE, & FIRE HYDRANT	W
SS S SS	SEWER LINE AND MANHOLE	SS
	DRAIN MANHOLE, DRAIN PIPE, CATCH BASIN, & AREA DRAIN	SD D
RD	ROOF DRAIN AND DOWNSPOUT	RD DS
UD	PERFORATED UNDERDRAIN	UD
FD	FOUNDATION DRAIN	FD
W	WATER MAIN AND VALVE	W
G	NATURAL GAS LINE AND VALVE	G
	PROPERTY LINE	
	EASEMENT LINE	
BM	BENCHMARK	
DH	DRILL HOLE	
CBDH	DRILL HOLE IN CONCRETE BLOCK	
SBDH	DRILL HOLE IN STONE BOUND	
I.ROD	IRON ROD	
BSW	BRICK SIDEWALK	
HYD	HYDRANT	
(C)	CALCULATED	
(R)	RECORD	
(R/H)	RECORD AND HELD	
(F)	FOUND	
(F/H)	FOUND AND HELD	
GC	GRANITE CURB	
	CHAIN LINK FENCE	
	SILT FENCE	
x x x	WOOD FENCE	
	STONE WALL	
	EDGE OF GRAVEL OR DIRT ROAD	
	EDGE OF PAVEMENT	
VGC	CURB (see abbreviations)	VGC
× 232.6	SPOT ELEVATION	× 13.3
92	ELEVATION CONTOUR	92
208.8 WFA2	LIMIT OF BORDERING VEGETATED WETLAND (WITH FLAG NUMBER)	
	EDGE OF WOODS OR BRUSH (DRIP LINE)	
26.8 12"M	PROMINENT DECIDUOUS TREE WITH ELEVATION, SIZE AND SPECIES	
26.8 18"P	PROMINENT CONIFEROUS TREE WITH ELEVATION, SIZE AND SPECIES	
	STONE RIP-RAP	
	LIMIT OF 100-FOOT WETLAND BUFFER ZONE	
	LIMIT OF 200' RIVERFRONT SETBACK	
	LIMIT OF 50-FOOT RIVERFRONT SETBACK	
	LIMIT OF 30' B.V.W. NO-DISTURB ZONE	
TP	TEST PIT	
	BUILDING, STEPS & OVERHANG	

KEY

ICC	INTEGRAL CONCRETE CURB
VGC	VERTICAL GRANITE CURB
SL	STOP LINE/STOP BAR
C.O.	CLEANOUT
RD	ROOF DRAIN
EV	ELECTRIC VEHICLE
EVR	ELECTRIC VEHICLE READY

PERMIT SITE PLAN

39 West Street
Medway, MA 02053

ASSESSORS:

MAP	PARCEL
55	51

PREPARED FOR:

STEVEN G. BRODY

39 West Street
Medway, MA 02053

HANCOCK ASSOCIATES

Civil Engineers

Land Surveyors

Wetland Scientists

315 ELM STREET, MARLBOROUGH, MA 01752
VOICE (508) 460-1111, FAX (508) 460-1121
WWW.HANCOCKASSOCIATES.COM

COMMONWEALTH OF MASSACHUSETTS
JOSEPH D. PEZNOLA
CIVIL
No. 38117
REGISTERED PROFESSIONAL ENGINEER

Joseph D. Peznola P.E.

Digitally signed by Joseph D. Peznola P.E.
DN: cn=Joseph D. Peznola P.E., o=Hancock Associates, ou=Civil Engineer, email=jpeznola@hancockassociates.com, c=US
Date: 2025.08.15 08:16:00 -04'00'

NO.	BY	APP	DATE	ISSUE/REVISION DESCRIPTION

DATE:	8/15/25	DESIGN BY:	DJR
SCALE:	AS NOTED	DRAWN BY:	DJR
APPRVD. BY:	JP	CHECK BY:	BGG

NOTES, REFERENCES, AND LEGEND

PLOT DATE: Aug 15, 2025 8:17 am
PATH: V:\Def\USA\2nd 30 Projects\25337B - Brody - Medway\Eng\DWG\

DWG:	25337SP.dwg
LAYOUT:	2NRL
SHEET:	2 OF 13

NRL

PROJECT NO.: 25337

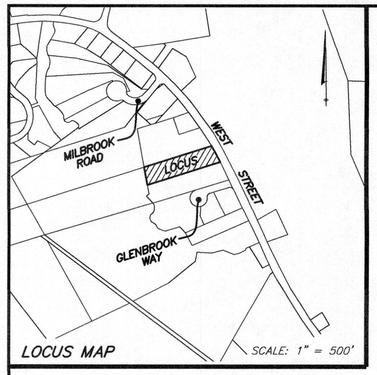

ASSESSORS:

MAP 55, LOT 51

ZONING:

AGRICULTURAL RESIDENTIAL AR-2

REFERENCES:

DEED BOOK 37060, PAGE 585
PLAN 284 OF 1951
PLAN 934 OF 1969
LAND COURT PLAN 12715C
1929 LAYOUT OF WEST STREET

RECORD OWNER:

STEVEN GREGORY BRODY
39 WEST STREET
MEDWAY, MA 02053

NOTES:

1) THE VERTICAL DATUM FOR THIS SURVEY IS THE NORTH AMERICAN VERTICAL DATUM OF 1988 (NAVD88). SAID DATUM WAS ESTABLISHED VIA GPS OBSERVATIONS UTILIZING NAD83 (NA2011) EPOCH 2010.00 (MYCS2) AND GEOID 18.

2) UNDERGROUND UTILITIES SHOWN HEREON ARE COMPILED FROM FIELD LOCATIONS OF STRUCTURES AND FROM AVAILABLE RECORD INFORMATION ON FILE AT THE TOWN ENGINEERING OFFICES, TOWN D.P.W., MASS HIGHWAY DEPT. AND UTILITY COMPANIES. OTHER UNDERGROUND UTILITIES MAY EXIST. IT SHALL BE THE RESPONSIBILITY OF THE CONTRACTOR TO VERIFY THE LOCATION, SIZE & ELEVATION OF ALL UTILITIES WITHIN THE AREA OF PROPOSED WORK AND TO CONTACT "DIG-SAFE" AT 1-888-344-7233 AT LEAST 72 HOURS PRIOR TO ANY EXCAVATION, DEMOLITION OR CONSTRUCTION.

3) THE LOCATION OF UNDERGROUND STORAGE TANKS, IF ANY, ARE UNKNOWN.

4) THIS TOPOGRAPHIC SURVEY WAS PREPARED TO MEET NATIONAL MAP ACCURACY STANDARDS AT A SCALE OF 1"=20' HORIZONTALLY AND A 1 FOOT CONTOUR INTERVAL VERTICALLY. ANY REPRODUCTIONS OR RE-SCALING MAY EFFECT THE MAP ACCURACY.

5) WETLAND AND RIVERFRONT FLAGS SHOWN HEREON DELINEATED BY THREE OAKS ENVIRONMENTAL AND FIELD LOCATED BY HANCOCK ASSOCIATES.

6) AS OF DATE OF THIS PLAN, NO EASEMENT OF RECORD HAS BEEN FOUND AT THE NORFOLK COUNTRY REGISTRY OF DEEDS OR WITH THE TOWN OF MEDWAY FOR THE EXISTING SEWER LINE (ON BOSTON EDISON COMPANY PARCEL) NORTH OF THE SURVEYED PROPERTY.

7) SEWER LINE SHOWN PER TIES ON A PLAN SUPPLIED TO THIS OFFICE BY MEDWAY DPW ENTITLED MEDWAY INDUSTRIAL PARK SEWER EXTENTION, SHEET C-9, REVISED THROUGH MAY 2, 2008 BY TATA & HOWARD INCORPORATED.

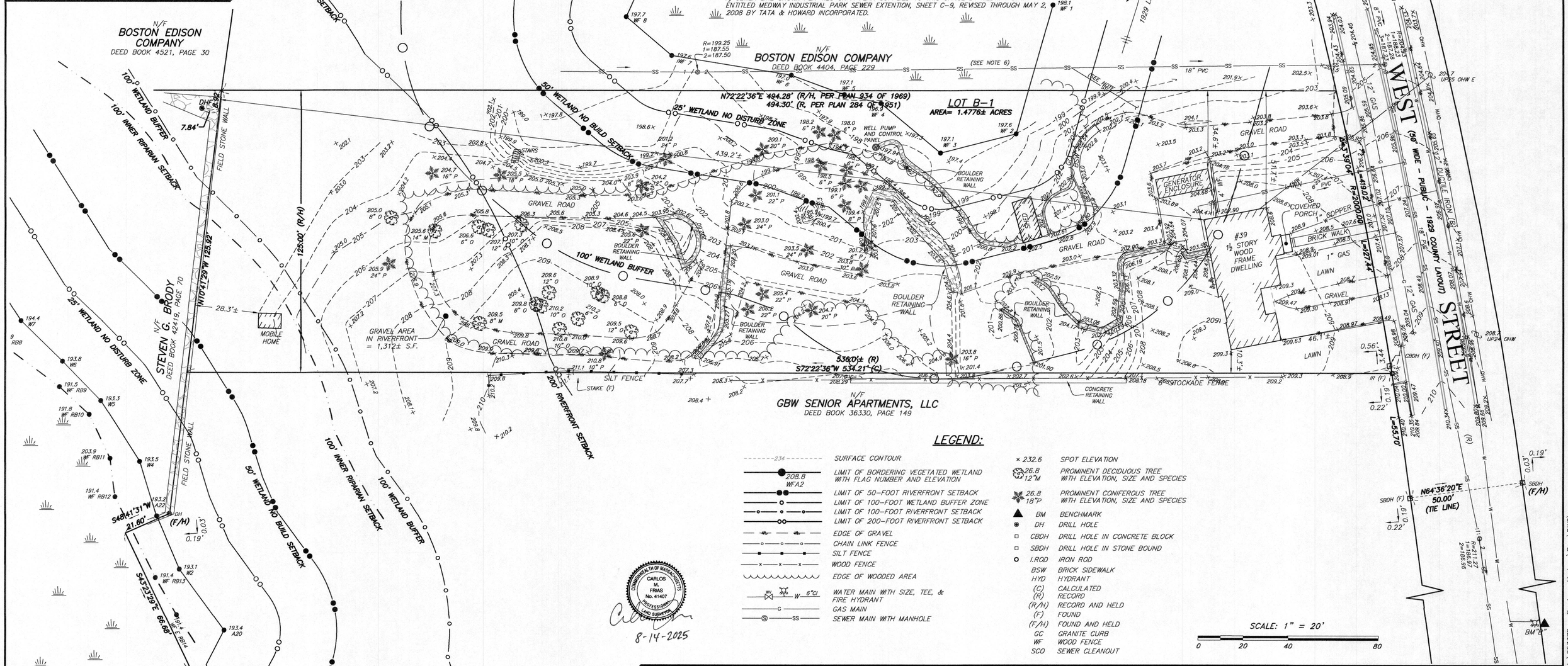

LEGEND:

234	SURFACE CONTOUR
208.8 WFA2	LIMIT OF BORDERING VEGETATED WETLAND WITH FLAG NUMBER AND ELEVATION
	LIMIT OF 50-FOOT RIVERFRONT SETBACK
	LIMIT OF 100-FOOT WETLAND BUFFER ZONE
	LIMIT OF 100-FOOT RIVERFRONT SETBACK
	LIMIT OF 200-FOOT RIVERFRONT SETBACK
	EDGE OF GRAVEL
	CHAIN LINK FENCE
	SILT FENCE
	WOOD FENCE
	EDGE OF WOODED AREA
WV W 6"CI	WATER MAIN WITH SIZE, TEE, & FIRE HYDRANT
G	GAS MAIN
S SS	SEWER MAIN WITH MANHOLE
× 232.6	SPOT ELEVATION
26.8 12"M	PROMINENT DECIDUOUS TREE WITH ELEVATION, SIZE AND SPECIES
26.8 18"P	PROMINENT CONIFEROUS TREE WITH ELEVATION, SIZE AND SPECIES
BM	BENCHMARK
DH	DRILL HOLE
CBDH	DRILL HOLE IN CONCRETE BLOCK
SBDH	DRILL HOLE IN STONE BOUND
I.ROD	IRON ROD
BSW	BRICK SIDEWALK
HYD	HYDRANT
(C)	CALCULATED
(R)	RECORD
(R/H)	RECORD AND HELD
(F)	FOUND
(F/H)	FOUND AND HELD
GC	GRANITE CURB
WF	WOOD FENCE
SCO	SEWER CLEANOUT

SCALE: 1" = 20'
0 20 40 80

COMMONWEALTH OF MASSACHUSETTS
CARLOS M. FRIAS
No. 41407
PROFESSIONAL LAND SURVEYOR

8-14-2025

ELEVATION BENCH MARKS		
▲ DATUM: SEE NOTE 1		
NO.	DESCRIPTION	ELEV.
A.	PUNCH MARK ON BOLT OVER MAIN OPENING OF HYD	205.93
B.	TOP OF HYDRANT SPINDLE	212.45

NO.	BY	APP	DATE	ISSUE/REVISION DESCRIPTION
1	CME	CMF	8/1/25	UPDATE TOPO, UTILITY AND SEWER INVERTS
1	CME	CMF	4/28/25	REVISE WETLAND AND RIVERFRONT FLAGS PER MEDWAY CONSERVATION COMMISSION

HANCOCK ASSOCIATES
Civil Engineers Land Surveyors
Wetland Scientists
315 ELM STREET, MARLBOROUGH, MA 01752
VOICE (508) 460-1111, FAX (508) 460-1121
WWW.HANCOCKASSOCIATES.COM

PREPARED FOR:
STEVEN BRODY
39 West Street
Medway, Massachusetts 02053

SITE ADDRESS:
#39 WEST STREET
Medway, Massachusetts 02053

PLAN TITLE:
EXISTING CONDITIONS PLAN OF LAND IN MEDWAY, MA

DATE:	3/11/25
SCALE:	1"=20'
DESIGN BY:	N/A
DRAWN BY:	LMT/CME
CHECK BY:	CMF
DWG:	25337sv1.dwg
LAYOUT:	EC
SHEET:	1 OF 1

EC

PROJECT NO.: 25337

PATH: V:\Vol1\HSA\Civil 3D Projects\25337B - Brody - Medway\Surv\DWG\

CONSTRUCTION SEQUENCING:

1. INSTALL CONSTRUCTION FENCE AS SHOWN AND EROSION CONTROLS INCLUDING STRAW WATTLE.
2. INSTALL RETAINING WALLS PER APPROVED WALL PLAN TO FINAL ELEVATIONS.
3. CONSTRUCT TEMPORARY SEDIMENT BASIN AND DIVERSION SWALES PER PLAN.
4. REMOVE TREES AND GRUB SITE.
5. REMOVE EXISTING BUILDINGS.
6. COMMENCE CUT/BLAST OPERATIONS AND FILL OPERATIONS, RAISING WALL TO MAINTAIN MINIMUM 2 FT. HIGHER THAN FILL SIDE OF WALL. MAINTAIN AND/OR REBUILD SEDIMENT PONDS AND DIVERSION SWALES TO SUIT.
7. STABILIZE UP-GRADIENT AREAS AS SOON AS POSSIBLE.
8. RETURN AREA BELOW WALL TO NATURAL WITH EROSION CONTROL SEED MIX.
9. EXCAVATE AND CONSTRUCT MAIN BUILDING FOUNDATION.
10. CONSTRUCT BUILDING.
11. INSTALL INFILTRATION SYSTEMS AND DRAINAGE STRUCTURES.

TEMPORARY SEDIMENT BASIN CALCULATIONS

VOLUME REQUIRED IS BASED ON 1 INCH DEPTH

= (1 INCH)(1 INCH/12 INCHES PER FOOT) x UPSTREAM WATERSHED AREA

BASIN ID	UPSTREAM WATERSHED AREA	VOLUME REQUIRED	VOLUME PROVIDED	EXCESS
1	17,777 SF	1,481 CF	1,554 CF	73 CF
2	19,398 SF	1,617 CF	1,802 CF	185 CF
3	4,647 SF	387 CF	430 CF	43 CF

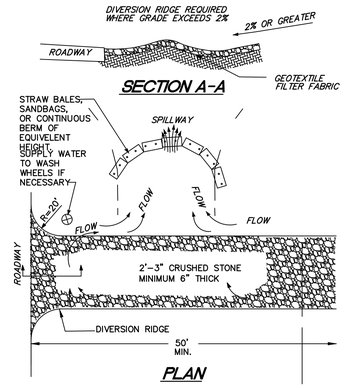

NOTES:
1. THE ENTRANCE SHALL BE MAINTAINED IN A CONDITION THAT WILL PREVENT TRACKING OR FLOWING OF SEDIMENT ONTO PUBLIC RIGHT-OF-WAYS. THIS MAY REQUIRE TOP DRESSING, REPAIR AND/OR CLEANOUT OF ANY MEASURES USED TO TRAP SEDIMENT.
2. WHEN NECESSARY WHEELS SHALL BE CLEANED PRIOPR TO ENTRANCE ONTO PUBLIC RIGHT-OF-WAY.
3. WHEN WASHING IS REQUIRED, IT SHALL BE DONE ON AN AREA STABLIZED WITH CRUSHED STONE THAT DRAINS INTO AN APPROVED SEDIMENT TRAP OR SEDIMENT BASIN.

TEMPORARY GRAVEL CONSTRUCTION ENTRANCE/EXIT
NOT TO SCALE

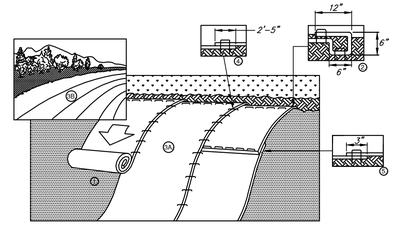

GENERAL NOTES:
1. ABOVE SLOPE TREATMENT SHALL BE PROVIDED FOR SLOPES STEEPER THAN 3:1 WHERE EMBANKMENT HEIGHT IS 4 FEET OR MORE.

2. THE ABOVE DETAIL IS PROVIDED BY NORTH AMERICAN GREEN. ALL SLOPE STABILIZATION PRODUCTS SHALL CONFORM TO THE MANUFACTURER'S SPECIFICATIONS AND INSTALLATION GUIDELINES.

3. ROLLED EROSION CONTROL PRODUCT TO BE SC150BN BY NORTH AMERICAN GREEN OR APPROVED EQUAL.

INSTALLATION NOTES:
1. PREPARE SOIL BEFORE INSTALLING ROLLED EROSION CONTROL PRODUCTS (RECP'S), INCLUDING ANY NECESSARY APPLICATION OF LIME, FERTILIZER AND SEED.

2. BEGIN AT THE TOP OF THE SLOPE BY ANCHORING THE RECP'S IN A 6" DEEP X 6" WIDE TRENCH WITH APPROXIMATELY 12" OF RECP'S EXTENDED BEYOND THE UP-SLOPE PORTION OF THE TRENCH. ANCHOR THE RECP'S WITH A ROW OF STAPLES/STAKES APPROXIMATELY 12" APART IN THE BOTTOM OF THE TRENCH. BACKFILL AND COMPACT THE TRENCH AFTER STAPLING. APPLY SEED TO COMPACTED SOIL AND FOLD REMAINING 12" PORTION OF RECP'S BACK OVER THE SEED AND COMPACTED SOIL. SECURE THE RECP'S OVER THE COMPACTED SOIL WITH A ROW OF STAPLES/STAKES SPACED APPROXIMATELY 12" APART ACROSS THE ENTIRE WIDTH OF THE RECP'S.

3. ROLL THE RECP'S (A.) DOWN OR (B.) HORIZONTALLY ACROSS THE SLOPE. RECP'S WILL UNROLL WITH APPROPRIATE SIDE AGAINST THE SOIL SURFACE. ALL RECP'S MUST BE SECURELY FASTENED TO THE SOIL SURFACE BY PLACING STAPLES/STAKES IN APPROPRIATE LOCATIONS AS SHOWN IN THE STAPLE PATTERN GUIDE. USING THE DOT SYSTEM, STAPLES/STAKES SHOULD BE PLACED THROUGH EACH OF THE COLORED DOTS CORRESPONDING TO THE APPROPRIATE STAPLE PATTERN.

4. THE EDGES OF PARALLES RECP'S MUST BE STAPLED WITH APPROXIMATELY 2"-5" OF OVERLAP DEPENDING ON THE RECP'S TYPE.

5. CONSECUTIVE RECP'S SPLICED DOWN THE SLOPE MUST BE PLACED END OVER END (SHINGLE STYLE) WITH AN APPROXIMATE 3" OVERLAP. STAPLE THROUGH OVERLAPPED AREA, APPROXIMATELY 12" APART ACROSS THE ENTIRE RECP'S WIDTH. IN LOOSE SOIL CONDITIONS, THE USE OF STAPLE OR STAKE LENGTHS GREATER THAN 6" MAY BE NECESSARY TO PROPERLY SECURE THE RECP'S.

MAJOR SLOPE STABILIZATION
ISOMETRIC VIEW
NOT TO SCALE

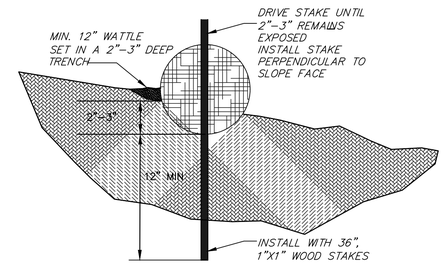

STAKED WATTLE INSTALLATION
NOT TO SCALE

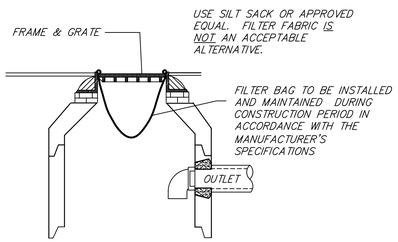

CATCH BASIN FILTER BAG
TYPICAL CROSS SECTION - NOT TO SCALE

GRAVITY BLOCK WALL TREATMENT
NOT TO SCALE

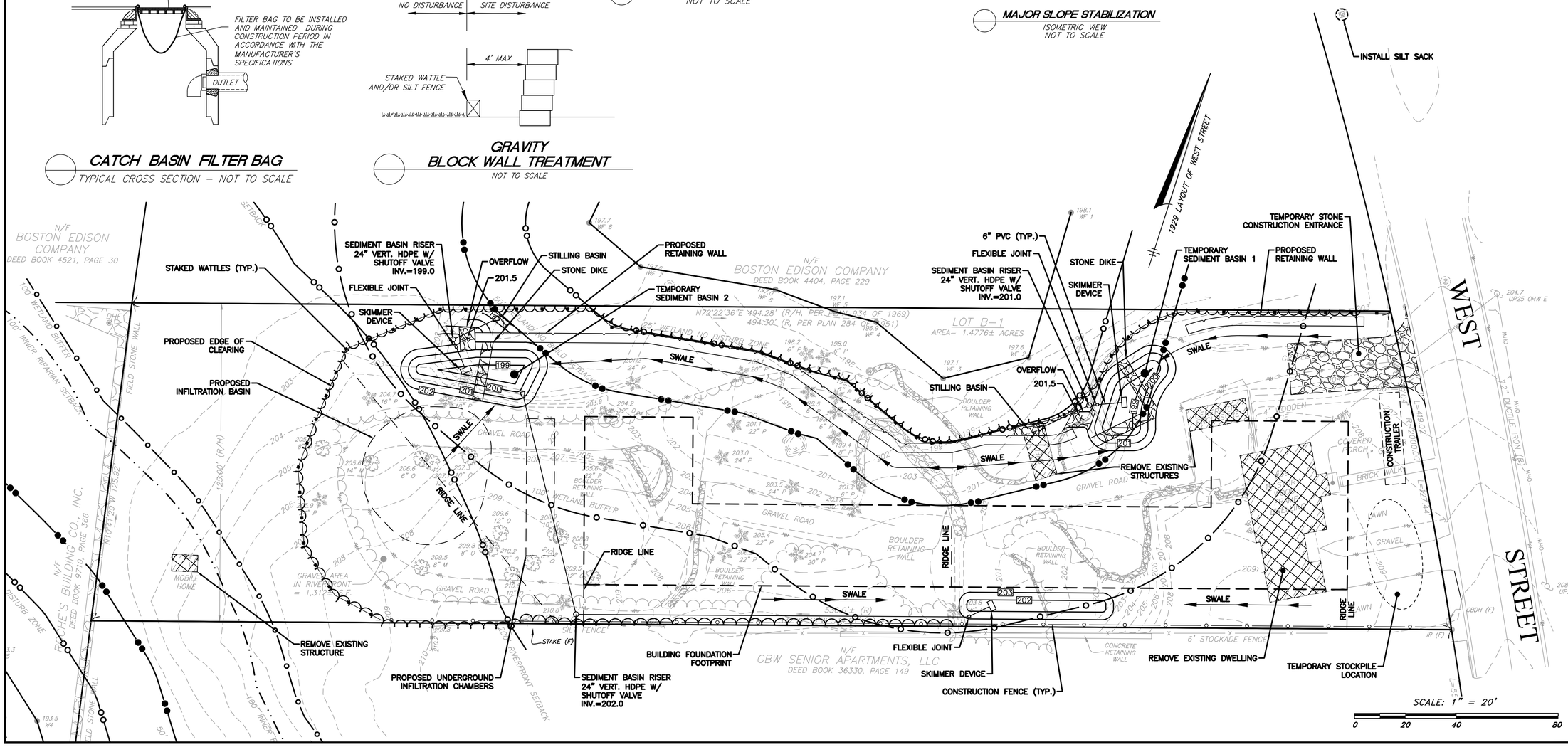

PERMIT SITE PLAN

39 West Street
Medway, MA 02053

ASSESSORS:

MAP	PARCEL
55	51

PREPARED FOR:

STEVEN G. BRODY

39 West Street
Medway, MA 02053

HANCOCK ASSOCIATES

Civil Engineers

Land Surveyors

Wetland Scientists

315 ELM STREET, MARLBOROUGH, MA 01752
VOICE (508) 460-1111, FAX (508) 460-1121
WWW.HANCOCKASSOCIATES.COM

COMMONWEALTH OF MASSACHUSETTS JOSEPH D. PEZNOLA CIVIL No. 38117 REGISTERED PROFESSIONAL ENGINEER

Joseph D. Peznola P.E.

NO.	BY	APP	DATE	ISSUE/REVISION DESCRIPTION

DATE:	8/15/25	DESIGN BY:	DJR
SCALE:	1"=20'	DRAWN BY:	DJR
APPRVD. BY:	JP	CHECK BY:	BGG

DEMOLITION AND EROSION AND SEDIMENT CONTROL PLAN

PLOT DATE: Aug 15, 2025 8:18 am
PATH: V:\Jobs\2\h4 30 Projects\25337B - Brody - Medway\Eng\DWG\

DWG: 25337SP.dwg	DESC
LAYOUT: 4DESC	
SHEET: 4 OF 13	
PROJECT NO.:	25337

ZONING:

PER MEDWAY ZONING BYLAW, AS AMENDED – 5/12/2025
PER MEDWAY ZONING MAP, DATED 9/25/2024 WITH
AMENDMENTS APPROVED AT 11/12/2024 TOWN MEETING

ZONING DISTRICTS
AR–2 AGRICULTURAL RESIDENTIAL 2
MOD MULTIFAMILY OVERLAY DISTRICT

MOD APPLICABILITY: SUBDISTRICT 3/GLEN BROOK
(INCLUDES 39 WEST STREET, APN 55–51)

DENSITY AND DIMENSIONAL REGULATIONS (MOD)
PER §5.6.5.E. OF TOWN OF MEDWAY ZONING BYLAW

ITEM	REQUIRED	PROPOSED
MIN. LOT AREA	20,000 SF	64,366± SF
MAX. LOT COVERAGE	20%	19.99%
MIN. OPEN SPACE	30%	40.3%
MAX. HEIGHT	3 STORIES	3 STORIES
MAX. HEIGHT	45 FT	44'–10"
MIN. FRONTAGE	100 FT	127± FT
MIN. SETBACKS		
FRONT	25 FT	25.3'
SIDE	15 FT	15.5'
REAR	20 FT	182.0'
MAX. DENSITY		
PER ACRE	20 UNITS	
PER BUILDING	24 UNITS	

OUTDOOR AMENITY SPACE
PER §5.6.5.H.11. OF TOWN OF MEDWAY ZONING BYLAW:
MIN. 20% OF LOT DEDICATED TO OUTDOOR AMENITY SPACE

13,397 (PRIVATE YARD) / 64,366 S.F. =
20.8% PROPOSED

UNIT DENSITY CALCULATION:

PER MEDWAY ZONING BYLAW, AS AMENDED – 5/12/2025

IN MULTIFAMILY OVERLAY DISTRICT (MOD), MAXIMUM DENSITY:
20 UNITS PER ACRE
24 UNITS PER BUILDING

LOT AREA = 64,366± SF = 1.48± AC
1.48 AC x 20 UNITS/AC = 29.6 –> 29 UNITS MAX

24 UNITS PROPOSED

PARKING CALCULATION:

PER §7.1.1 OF TOWN OF MEDWAY ZONING BYLAW:

MULTI–FAMILY DEVELOPMENT, OFF–STREET PARKING:
1.5 PARKING SPACES PER UNIT

24 UNITS x 1.5 SPACES/UNIT = 36 SPACES MIN.

36 SPACES PROPOSED

ELECTRIC VEHICLE PARKING:

PER §7.1.1.E.4 OF TOWN OF MEDWAY ZONING BYLAW:
2 PARKING SPACES REQUIRED FOR 26–50 TOTAL PARKING SPACES

2 ELECTRIC VEHICLE SPACES PROPOSED

PER 225 CMR 22: MA RESIDENTIAL STRETCH ENERGY CODE AND
MUNICIPAL OPT–IN SPECIALIZED CODE 2023, SECTION R404.4:
20% OF TOTAL SPACES SHALL BE EV READY
20% OF 36 SPACES = 8 SPACES REQUIRED

8 EV READY SPACES PROVIDED

MUTCD TRAFFIC SIGNAGE SUMMARY

STOP	R1–1	WHITE ON RED	24" x 24"

NOTE:
"NO PARKING" SIGNS TO BE SPECIFIED BY OWNER

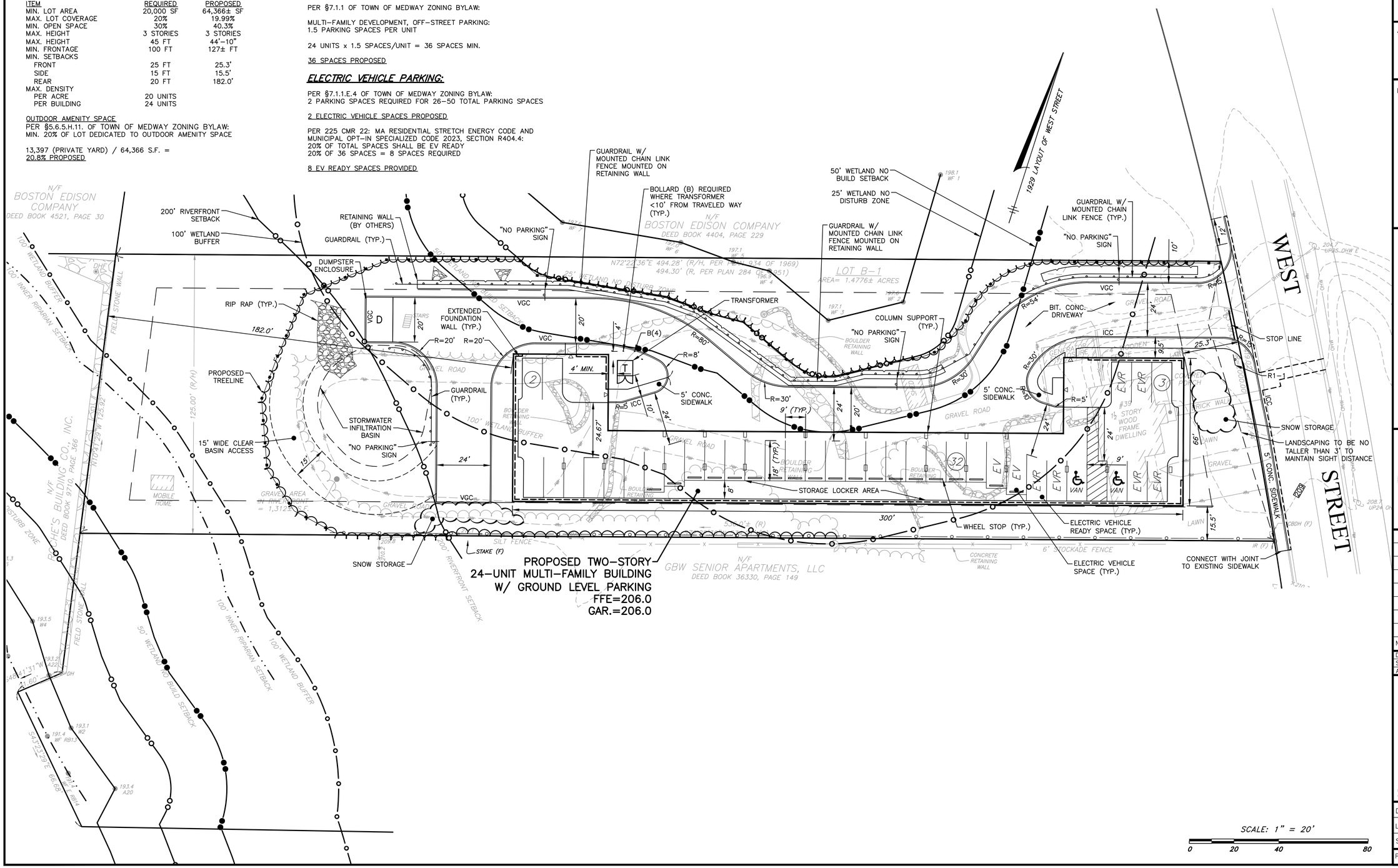

PERMIT SITE PLAN

39 West Street
Medway, MA 02053

ASSESSORS:

MAP	PARCEL
55	51

PREPARED FOR:

STEVEN G. BRODY

39 West Street
Medway, MA 02053

HANCOCK ASSOCIATES

Civil Engineers

Land Surveyors

Wetland Scientists

315 ELM STREET, MARLBOROUGH, MA 01752
VOICE (508) 460–1111, FAX (508) 460–1121
WWW.HANCOCKASSOCIATES.COM

COMMONWEALTH OF MASSACHUSETTS
JOSEPH D. PEZNOLA
CIVIL
No. 38117
REGISTERED PROFESSIONAL ENGINEER

Digitally signed by Joseph D. Peznola
DN: c=US, o=Massachusetts, ou=Hancock Associates, cn=Joseph D. Peznola, e=jpeznola@hancockassociates.com
Date: 2025.08.15 08:47:29-05'00'

NO.	BY	APP	DATE	ISSUE/REVISION DESCRIPTION

DATE:	8/15/25	DESIGN BY:	DJR
SCALE:	1"=20'	DRAWN BY:	DJR
APPRVD. BY:	JP	CHECK BY:	BGG

LAYOUT AND MATERIALS PLAN

PLOT DATE: Aug 15, 2025 8:23 am
Path: V:\Jobs\25A\25A 30 Projects\25337B - Brody - Medway\Dwg\DWG\

DWG:	25337SP.dwg
LAYOUT:	5LM
SHEET:	5 OF 13
PROJECT NO.:	25337

LM

TEST PIT TP-1 (EL. 209.0±)			
DEPTH	LAYER	TEXTURAL CLASSIFICATION	REDOXIMORPHIC FEATURES/NOTES
0"-3"	Ap	SANDY LOAM	NONE
3"-50"	FILL	--	NONE
50"-128"	C	GRAVELLY SAND	LUMBER SCRAPS & COBBLES
NO GROUNDWATER OBSERVED			

TEST PIT TP-2 (EL. 204.0±)			
DEPTH	LAYER	TEXTURAL CLASSIFICATION	REDOXIMORPHIC FEATURES
0"-16"	Ap	SANDY LOAM	NONE
16"-20"	Bw	FINE SAND W/ GRAVEL	NONE
20"-58"	C1	MEDIUM SAND	NONE
58"-126"	C2	GRAVELLY SAND	NONE
WEEPING @ 110", STANDING @ 118" ESHWT=110" (EL. 194.83±) BASED ON WEEPING			

TEST PIT TP-3 (EL. 199.8±)			
DEPTH	LAYER	TEXTURAL CLASSIFICATION	REDOXIMORPHIC FEATURES/NOTES
0"-18"	Ap	SAND	NONE
18"-32"	Bw	F. SAND W/ GRAVEL	NONE
32"-68"	C	C. SAND W/ GRAVEL	MOTTLING @ 40"
MOTTLING @ 40", STANDING @ 55" ESHWT=40" (EL. 196.5±) BASED ON MOTTLING			

TEST PIT TP-4 (EL. 198.5±)			
DEPTH	LAYER	TEXTURAL CLASSIFICATION	REDOXIMORPHIC FEATURES
0"-20"	Ap	SANDY LOAM	NONE
20"-28"	Bw	FSL W/ GRAVEL	MOTTLING @ 24"
28"-50"	C	C. SAND W/ GRAVEL	SEE ABOVE
MOTTLING @ 24", STANDING @ 37" ESHWT=24" (EL. 196.5±) BASED ON MOTTLING			

TEST PIT TP-5 (EL. 203.0±)			
DEPTH	LAYER	TEXTURAL CLASSIFICATION	REDOXIMORPHIC FEATURES
0"-19"	Ap	SANDY LOAM	NONE
19"-38"	Bw	FINE SANDY LOAM	NONE
38"-91"	C	C. SAND W/ GRAVEL	NONE
NO MOTTLING, STANDING @ 91" ESHWT=91" (EL. 195.4±) BASED ON STANDING WATER			

PERFORMED BY: DANIEL ROMERO (SE #14149)
DATE: 3/13/25

TEST PIT TP-6 (EL. 205.7±)			
DEPTH	LAYER	TEXTURAL CLASSIFICATION	REDOXIMORPHIC FEATURES
0"-10"	Ap	SANDY LOAM	NONE
10"-24"	Bw	FINE SANDY LOAM	NONE
24"-62"	C1	GRAVELLY C. SAND	NONE
62"-150"	C2	GRAVELLY LS	NONE
NO MOTTLING, STANDING @ 150" ESHWT=150" (EL. 193.2±) BASED ON STANDING WATER			

PERFORMED BY: DANIEL ROMERO (SE #14149)
DATE: 7/14/25

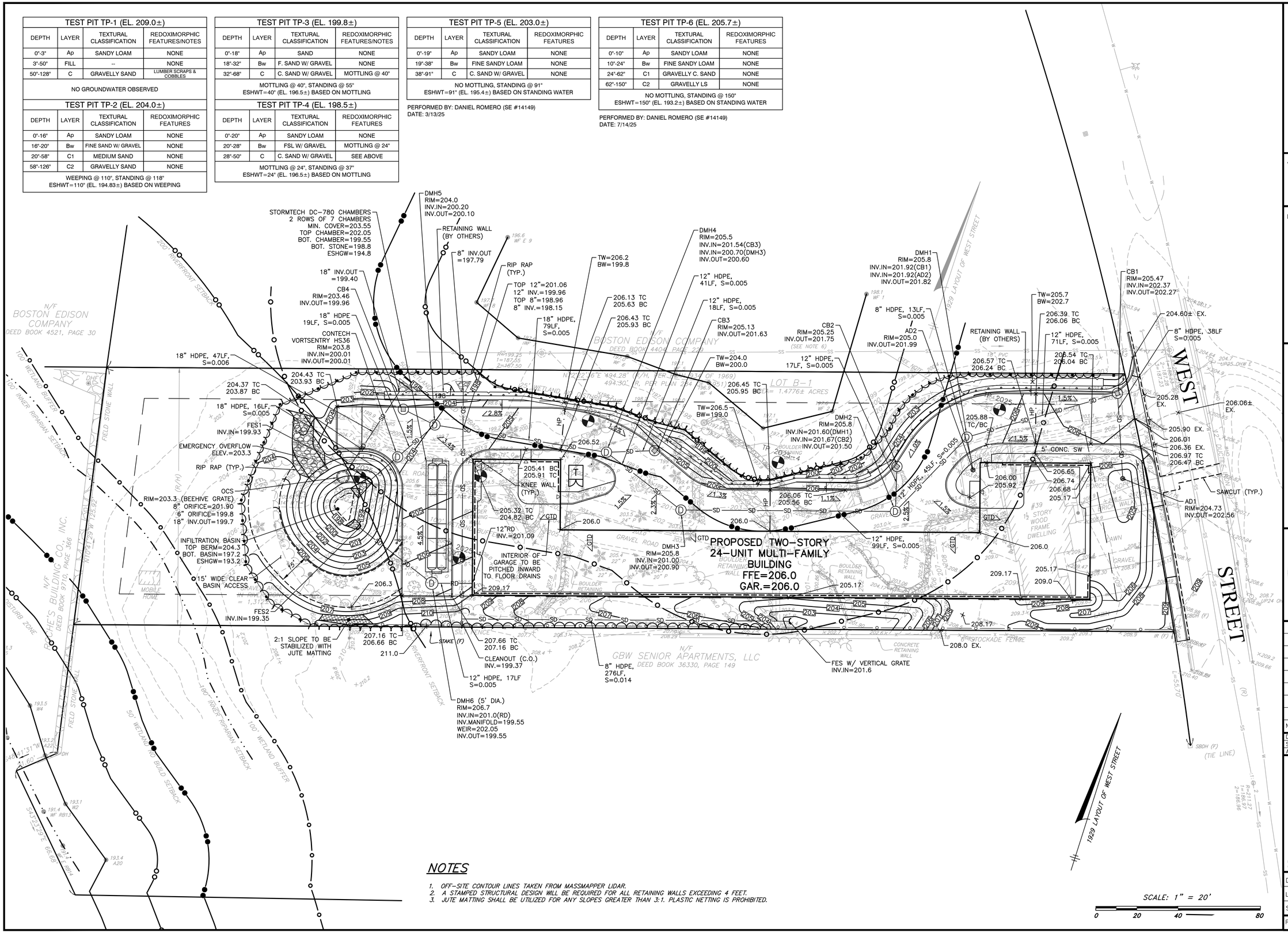

NOTES

1. OFF-SITE CONTOUR LINES TAKEN FROM MASSMAPPER LIDAR.
2. A STAMPED STRUCTURAL DESIGN WILL BE REQUIRED FOR ALL RETAINING WALLS EXCEEDING 4 FEET.
3. JUTE MATTING SHALL BE UTILIZED FOR ANY SLOPES GREATER THAN 3:1. PLASTIC NETTING IS PROHIBITED.

PERMIT SITE PLAN

39 West Street
Medway, MA 02053

ASSESSORS:

MAP	PARCEL
55	51

PREPARED FOR:

STEVEN G. BRODY

39 West Street
Medway, MA 02053

HANCOCK ASSOCIATES

Civil Engineers

Land Surveyors

Wetland Scientists

315 ELM STREET, MARLBOROUGH, MA 01752
VOICE (508) 460-1111, FAX (508) 460-1121
WWW.HANCOCKASSOCIATES.COM

COMMONWEALTH OF MASSACHUSETTS
JOSEPH D. PEZNOLA
CIVIL
No. 38117
REGISTERED PROFESSIONAL ENGINEER

Joseph D. Peznola P.E.

Digitally signed by Joseph D. Peznola
DN: CN=Joseph D. Peznola P.E., O=Hancock Associates, OU=Engineering, E=jpeznola@hancockassociates.com, C=US
Date: 2025.08.15 08:27:48 -04'00'

NO.	BY	APP	DATE	ISSUE/REVISION DESCRIPTION

DATE:	8/15/25	DESIGN BY:	DJR
SCALE:	1"=20'	DRAWN BY:	DJR
APPRVD. BY:	JP	CHECK BY:	BGG

GRADING AND STORMWATER MANAGEMENT PLAN

PLOT DATE: Aug 15, 2025 8:24 am
PATH: W:\Civil\GSA\DWG 3D Projects\25337S - Brody - Medway\Dwg\DWG\

DWG:	25337SP.dwg
LAYOUT:	6GD
SHEET:	6 OF 13
PROJECT NO.:	25337

GSW

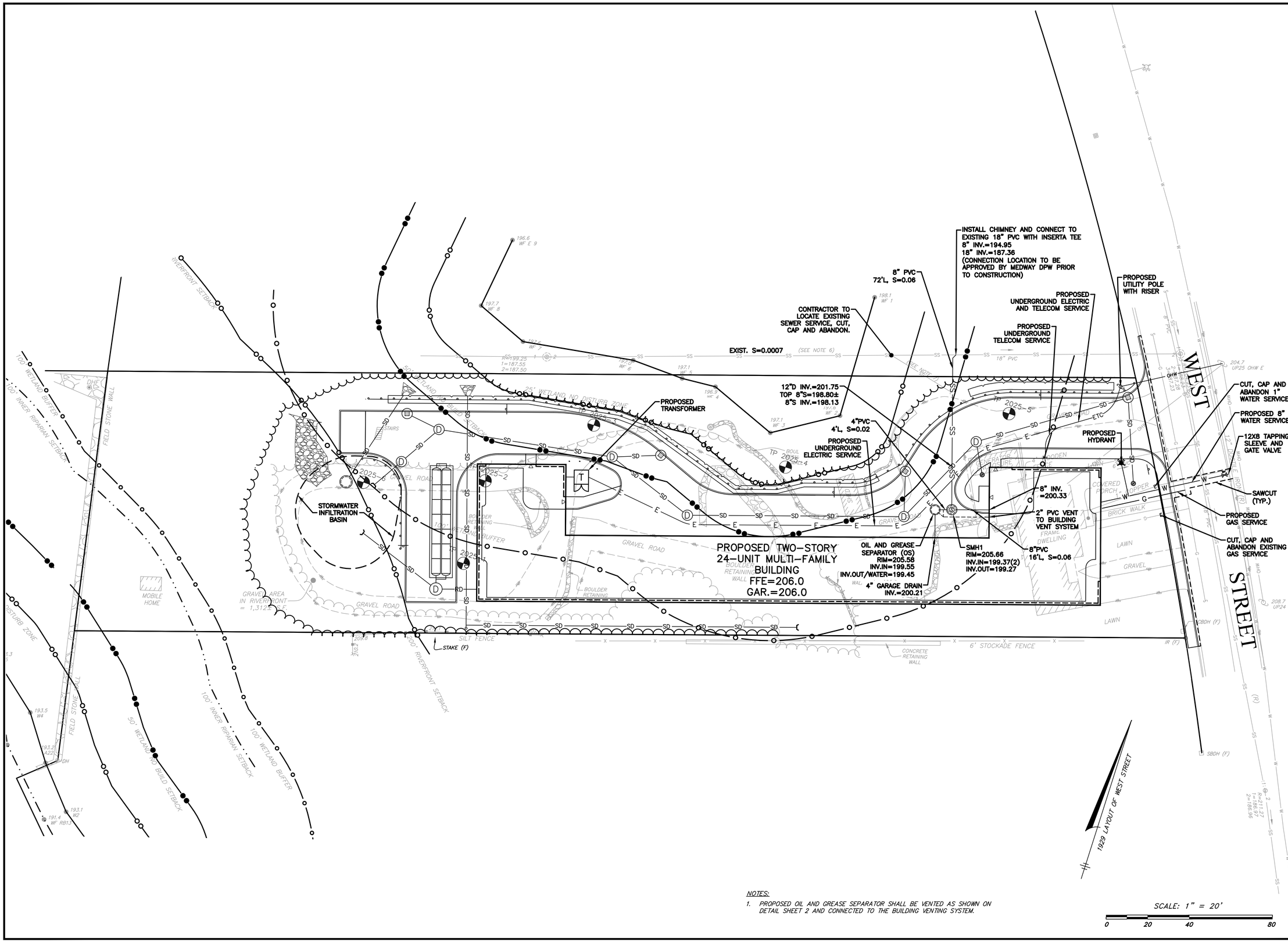

NOTES:

1. PROPOSED OIL AND GREASE SEPARATOR SHALL BE VENTED AS SHOWN ON DETAIL SHEET 2 AND CONNECTED TO THE BUILDING VENTING SYSTEM.

PERMIT SITE PLAN

39 West Street
Medway, MA 02053

ASSESSORS:

MAP	PARCEL
55	51

PREPARED FOR:

STEVEN G. BRODY

39 West Street
Medway, MA 02053

HANCOCK ASSOCIATES

Civil Engineers

Land Surveyors

Wetland Scientists

315 ELM STREET, MARLBOROUGH, MA 01752
VOICE (508) 460-1111, FAX (508) 460-1121
WWW.HANCOCKASSOCIATES.COM

COMMONWEALTH OF MASSACHUSETTS
JOSEPH D. PEZNOLA
CIVIL
No. 38117
REGISTERED PROFESSIONAL ENGINEER

Digitally signed by Joseph D. Peznola
DN: C=US, O=Hancock Associates, CN=Joseph D. Peznola, E=jpeznola@hancockassociates.com
Reason: I am the author of this document
Date: 2025.08.15 08:26:00-04'00'

Joseph D. Peznola, P.E.

NO.	BY	APP	DATE	ISSUE/REVISION DESCRIPTION

DATE:	8/15/25	DESIGN BY:	DJR
SCALE:	1"=20'	DRAWN BY:	DJR
APPRVD. BY:	JP	CHECK BY:	BGG

UTILITY PLAN

PLOT DATE: Aug 15, 2025 8:26 am
PATH: V:\Jobs\plan\2k 30 Projects\25337B - Brody - Medway\Dwg\DWG\

DWG:	25337SP.dwg
LAYOUT:	7UT
SHEET:	7 OF 13

UT

PROJECT NO.: 25337

Plant Schedule

Qty	Key	Botanical Name	Common Name	Size
TREES:				
1	HL	Gleditsia triacanthos 'Skyline'	Honeylocust	2-2.5"cal
3	KD	Cornus kousa	Korean Dogwood	2-2.5"cal
3	LPT	Platanus acerfolia	London Planetree	2-2.5"cal
3	RM	Acer rubrum 'Red Sunset'	Red Sunset Maple	2-2.5"cal
3	RO	Quercus rubra	Red Oak	2-2.5"cal
3	SFC	Malus 'Snowdrift'	Snowdrift Flowering Crab	2-2.5"cal
10	SHAD	Amelanchier canadensis	Downy Shadblow	8-10'
3	ZEL	Zelkova serrata 'Green Vase'	Green Vase Zelkova	2-2.5"cal
EVERGREENS:				
5	EG	Thuja occidentalis 'Smaragd'	Emerald Green Arborvitae	6-7'
16	ERC	Juniperus virginiana	Eastern Red Cedar	6-7'
10	GAV	Thuja x plicata 'Green Giant'	Green Giant Arborvitae	7-8'
15	HK	Tsuga canadensis	Canadian Hemlock	7-8'
20	P	Taxus cuspidata 'Capitata'	Pyramidal Yew	5-6'
SRHUBS:				
24	BAY	Myrica pensylvanicum	Northern Bayberry	2-3'
11	CL	Clethra alnifolia	Sweet Pepper	2-3'
3	FOTH	Fothergilla gardenii	Dwarf Fothergilla	#3pot
9	HBB	Vaccinium corymbosum	Highbush Blueberry	2-3'
9	IG	Ilex glabra 'Shamrock'	Shamrock Inkberry	#3pot
11	RTD	Cornus alba 'Elegantissima'	Varigated Red Twig Dogwood	#3pot
10	SAM	Sambucus canadensis	Common Elderberry	2-3'
2	VIA	Viburnum acerfolia	Mapleleaf Viburnum	3-4'
6	VID	Viburnum dentatum	Arrowwood	3-4'

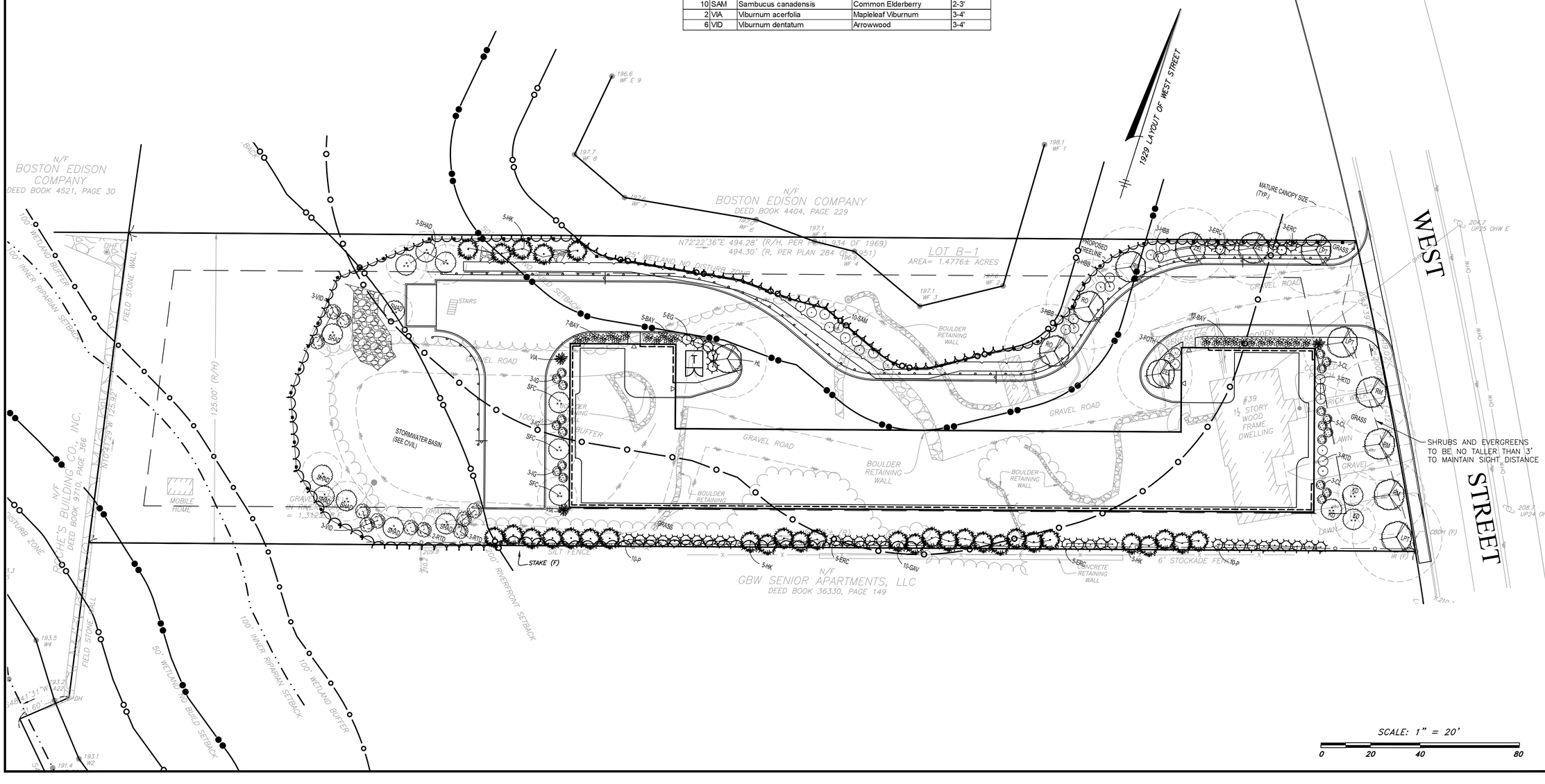

PERMIT SITE PLAN

39 West Street
Medway, MA 02053

ASSESSORS:

MAP	PARCEL
55	51

PREPARED FOR:

STEVEN G. BRODY

39 West Street
Medway, MA 02053

HANCOCK ASSOCIATES

Civil Engineers

Land Surveyors

Wetland Scientists

315 ELM STREET, MARLBOROUGH, MA 01752
VOICE (508) 460-1111, FAX (508) 460-1121
WWW.HANCOCKASSOCIATES.COM

NO.	BY	APP	DATE	ISSUE/REVISION DESCRIPTION

DATE:	8/13/25	DESIGN BY:	DJR
SCALE:	1"=20'	DRAWN BY:	DJR
APPRVD. BY:	JP	CHECK BY:	BGG

LANDSCAPE PLAN

PLOT DATE: Aug 12, 2025 4:30 pm
PATH: W:\Civil\Jobs\25K 3D Projects\25337S - Brody - Medway\Dwg\DWG\

DWG:	25337SP.dwg
LAYOUT:	BLA
SHEET:	8 OF 13

8

PROJECT NO.: 25337

Luminaire Schedule							
Symbol	Qty	Label	Tag	LLF	Luminaire Lumens	Luminaire Watts	Mounting Height
	3	CUBO SM 12W 3K TYPE III	W3-12W	0.960	1588	13.2	12
	5	CUBO SM 12W 3K TYPE IV	W4-12W	0.960	1276	13.1	12
	7	CUBO-SM 5W 3K TYPE II	W2-5W	0.960	536	5.6	10

Luminaire Location Summary						
		Insertion Point				
LumNo	Label	X	Y	Z	Orient	Tilt
1	CUBO SM 12W 3K TYPE III	8362.339	8561.056	12	107.737	0
2	CUBO SM 12W 3K TYPE III	8121.158	8484.521	12	107.109	0
3	CUBO SM 12W 3K TYPE III	8111.26	8446.766	12	198.679	0
4	CUBO SM 12W 3K TYPE IV	8166.693	8463.145	12	108.131	0
5	CUBO SM 12W 3K TYPE IV	8207.19	8476.04	12	108.131	0
6	CUBO SM 12W 3K TYPE IV	8247.686	8488.934	12	108.131	0
7	CUBO SM 12W 3K TYPE IV	8288.183	8501.829	12	108.131	0
8	CUBO SM 12W 3K TYPE IV	8328.68	8514.723	12	108.131	0
9	CUBO-SM 5W 3K TYPE II	8135.589	8419.767	10	289.01	0
10	CUBO-SM 5W 3K TYPE II	8178.477	8433.39	10	289.01	0
11	CUBO-SM 5W 3K TYPE II	8221.366	8447.013	10	289.01	0
12	CUBO-SM 5W 3K TYPE II	8264.254	8460.636	10	289.01	0
13	CUBO-SM 5W 3K TYPE II	8307.142	8474.259	10	289.01	0
14	CUBO-SM 5W 3K TYPE II	8350.031	8487.883	10	289.01	0
15	CUBO-SM 5W 3K TYPE II	8392.919	8501.506	10	289.01	0

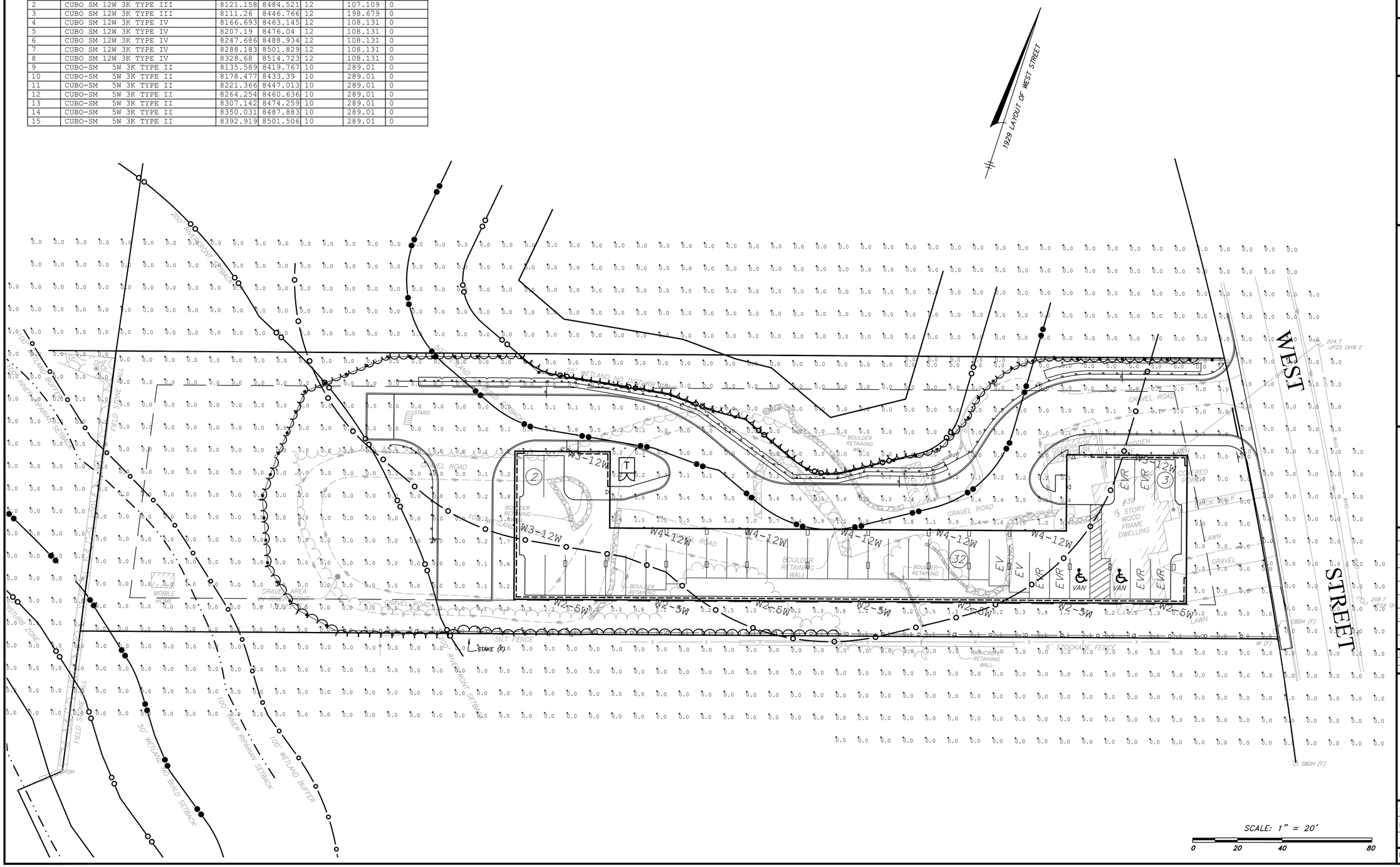

PERMIT SITE PLAN

39 West Street
Medway, MA 02053

ASSESSORS:

MAP 55 PARCEL 51

PREPARED FOR:

STEVEN G. BRODY

39 West Street
Medway, MA 02053

HANCOCK ASSOCIATES

Civil Engineers

Land Surveyors

Wetland Scientists

315 ELM STREET, MARLBOROUGH, MA 01752
VOICE (508) 460-1111, FAX (508) 460-1121
WWW.HANCOCKASSOCIATES.COM

NO.	BY	APP	DATE	ISSUE/REVISION DESCRIPTION

DATE:	8/15/25	DESIGN BY:	DJR
SCALE:	1"=20'	DRAWN BY:	DJR
APPRVD. BY:	JP	CHECK BY:	BGG

LIGHTING PLAN

PLOT DATE: Aug 15, 2025 8:28 am
PATH: W:\Civil\DGN\25-30 Projects\25337S - Brody - Medway\Dwg\DWG\

DWG: 25337SP.dwg	LI
LAYOUT: 9LI	
SHEET: 9 OF 13	
PROJECT NO.:	25337

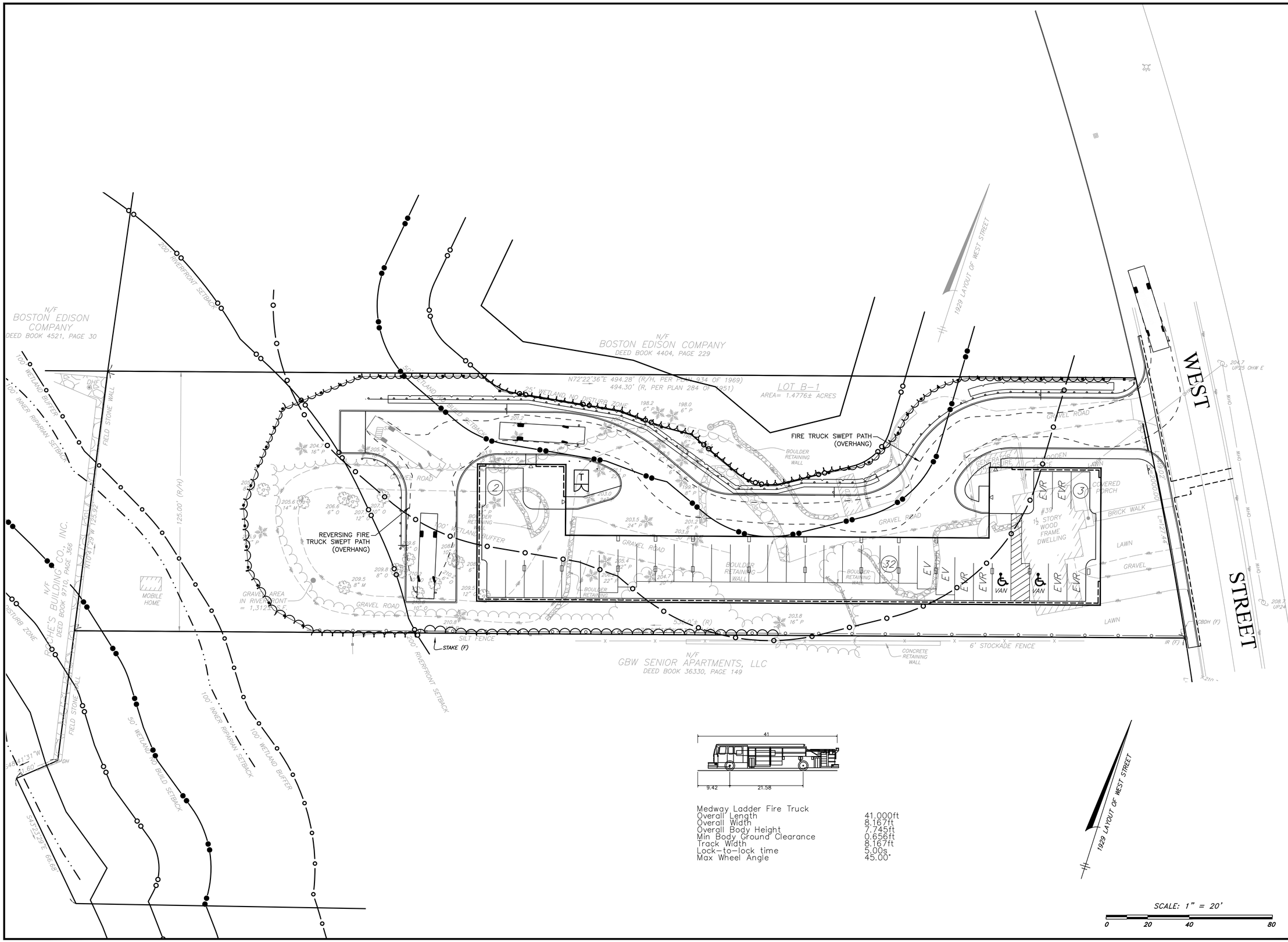

PERMIT SITE PLAN

39 West Street
Medway, MA 02053

ASSESSORS:

MAP	PARCEL
55	51

PREPARED FOR:

STEVEN G. BRODY

39 West Street
Medway, MA 02053

HANCOCK ASSOCIATES

Civil Engineers

Land Surveyors

Wetland Scientists

315 ELM STREET, MARLBOROUGH, MA 01752
VOICE (508) 460-1111, FAX (508) 460-1121
WWW.HANCOCKASSOCIATES.COM

COMMONWEALTH OF MASSACHUSETTS
JOSEPH D. PEZNOLA
CIVIL
No. 38117
REGISTERED PROFESSIONAL ENGINEER

Joseph D. Peznola P.E.

NO.	BY	APP	DATE	ISSUE/REVISION DESCRIPTION

DATE:	8/15/25	DESIGN BY:	DJR
SCALE:	1"=20'	DRAWN BY:	DJR
APPRVD. BY:	JP	CHECK BY:	BGG

SWEPT PATH ANALYSIS

PLOT DATE: Aug 15, 2025 8:30 am
Path: V:\Jobs\25xx\25xx 3D Projects\25337B - Brody - Medway\Dwg\SPA\

DWG:	25337SP.dwg
LAYOUT:	10SPA
SHEET:	10 OF 13

SPA

PROJECT NO.: 25337

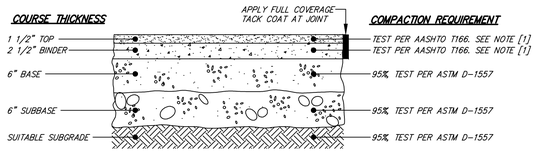

NOTES:
[1] COMPACT TO TEST AVERAGE OF 95% ±2.5%

MATERIAL	SPECIFICATION	MAXIMUM AGGREGATE OR PARTICLE SIZE (IN.)
TOP – BITUMINOUS CONCRETE	MHD M3.11.03 CLASS I, TYPE I-1	1/2
BINDER– BITUMINOUS CONCRETE	MHD M3.11.03 CLASS I, TYPE I-1	1
BASE – DENSE GRADED CRUSHED STONE	MHD M2.01.7	1 1/2
SUBBASE – GRAVEL BORROW	MHD M1.03.0 TYPE C	2

BITUMINOUS CONCRETE PAVEMENT
TYPICAL CROSS SECTION
NOT TO SCALE

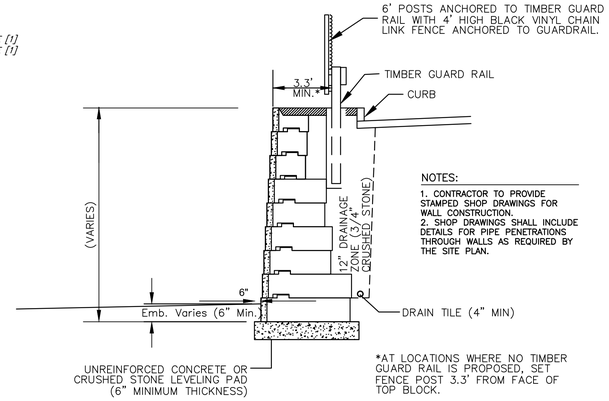

NOTES:
1. CONTRACTOR TO PROVIDE STAMPED SHOP DRAWINGS FOR WALL CONSTRUCTION.
2. SHOP DRAWINGS SHALL INCLUDE DETAILS FOR PIPE PENETRATIONS THROUGH WALLS AS REQUIRED BY THE SITE PLAN.

SHEA RECON GRAVITY BLOCK WALL
CROSS SECTION
NOT TO SCALE

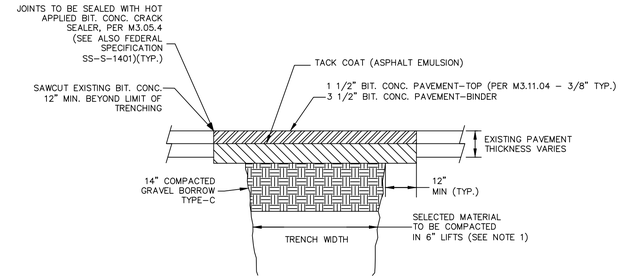

NOTE 1:
COMPACTION EQUIPMENT SHALL MEET OR EXCEED THE MINIMUM REQUIREMENTS TO OBTAIN THE COMPACTION STANDARDS DESCRIBED IN THE CONSTRUCTION NOTES, UNLESS OTHERWISE APPROVED BY THE CITY ENGINEER. IN PROXIMITY TO STRUCTURES, A JUMPING JACK COMPACTOR SHALL BE REQUIRED.

FINAL TRENCH PAVING
TYPICAL SECTION
NOT TO SCALE

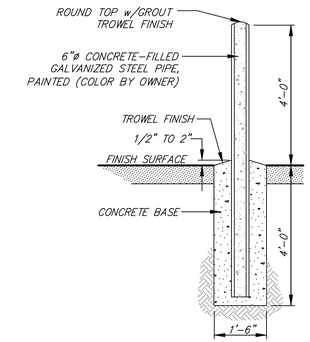

BOLLARD
TYP. CROSS SECTION
NOT TO SCALE

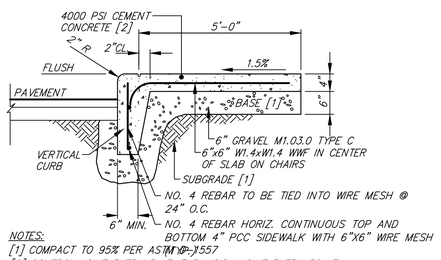

NOTES:
[1] COMPACT TO 95% PER ASTM D-1557
[2] CONTROL JOINT EVERY 5 LF, EXPANSION JOINT EVERY 30 LF.

SIDEWALK WITH INTEGRAL CURB
CROSS SECTION
NOT TO SCALE

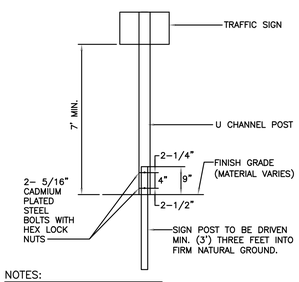

NOTES:
1. CHANNEL POST SECTIONS TO BE CONNECTED WITH AT LEAST TWO APPROPRIATELY SIZED GALVANIZED BOLTS W/ LOCK WASHERS AND NUTS.

BREAKAWAY TRAFFIC SIGN (STOP SIGN AND "NO PARKING" SIGNS)
CROSS SECTION
NOT TO SCALE

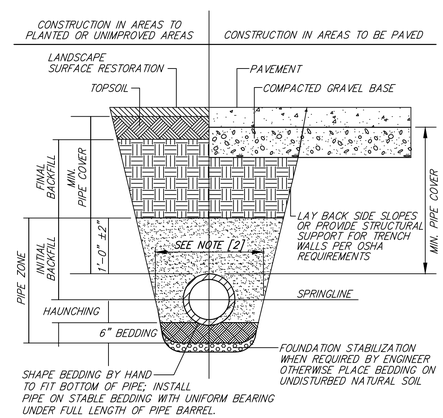

FOUNDATION, BEDDING, & BACKFILL MATERIALS		
PIPE MATERIAL	HDP, PVC	RC, DI
FOUNDATION STABILIZATION	[6]	[6]
BEDDING	[1]	[1]
HAUNCHING	[1]	[1]
INITIAL BACKFILL	[1]	[1]
FINAL BACKFILL	[4]	[4]
MIN. PIPE COVER	[5]	[5]

NOTES:
[1] PLACE 3/4"± GRADED GRANULAR BACKFILL AT OPTIMUM MOISTURE IN HORIZONTAL, 8"-DEEP, LOOSE LAYERS; COMPACT TO 95% PER ASTM D-1557.
[2] MINIMUM WIDTH OF TRENCH MEASURED AT THE SPRINGLINE OF THE PIPE, INCLUDING ANY NECESSARY SHEATHING:

PIPE I.D.	WIDTH
LESS THAN 21"	O.D. + 12"
21" TO 42"	O.D. + 24"
GREATER THAN 42"	O.D. + 30"

[3] INSTALL PIPE IN CENTER OF TRENCH.
[4] IN PLANTED OR UNIMPROVED AREAS, USE ON-SITE EXCAVATED MATERIAL FOR FINAL BACKFILL. COMPACT TO 95% PER ASTM D-1557. IN PAVED AREAS, OBTAIN ENGINEER APROVAL OF ON-SITE EXCAVATED MATERIALS FOR USE AS FINAL BACKFILL.
[5] MINIMUM COVER OVER TOP OF PIPE:

PIPE MATERIAL	HDP, PVC	RC, DI
WATER	5'-0"	5'-0"
SEWER	4'-0"	4'-0"
DRAIN	1'-6"	1'-0"

[6] FOR FOUNDATION STABILIZATION, USE 2"± CRUSHED STONE.

PIPE TRENCH
TYPICAL CROSS SECTION
NOT TO SCALE

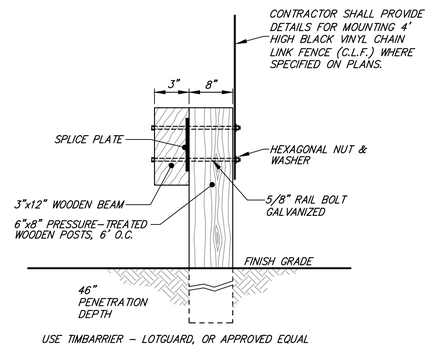

PARKING LOT WOOD GUARDRAIL
TYPICAL CROSS SECTION
NOT TO SCALE

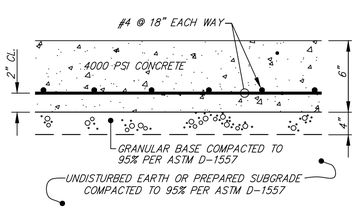

CONCRETE PAD
TYPICAL CROSS SECTION
NOT TO SCALE

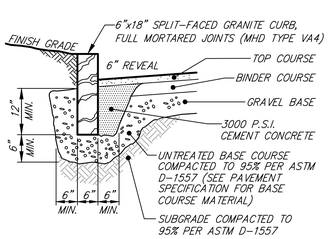

VERTICAL GRANITE CURB
CROSS SECTION
NOT TO SCALE

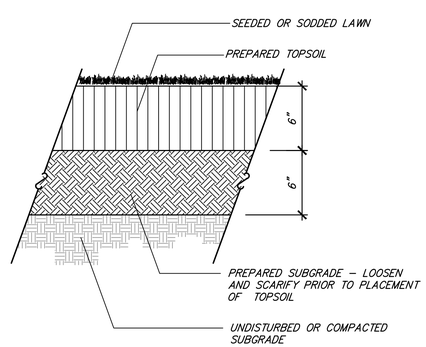

LOAM AND SEED
NOT TO SCALE

PERMIT SITE PLAN

39 West Street
Medway, MA 02053

ASSESSORS:
MAP 55 PARCEL 51

PREPARED FOR:
STEVEN G. BRODY

39 West Street
Medway, MA 02053

HANCOCK ASSOCIATES
Civil Engineers
Land Surveyors
Wetland Scientists
315 ELM STREET, MARLBOROUGH, MA 01752
VOICE (508) 460-1111, FAX (508) 460-1121
WWW.HANCOCKASSOCIATES.COM

COMMONWEALTH OF MASSACHUSETTS
JOSEPH D. PEZNOLA
CIVIL
No. 38117
REGISTERED PROFESSIONAL ENGINEER

Joseph D. Peznola P.E.

Digitally signed by Joseph D. Peznola P.E.
DN: cn=Joseph D. Peznola P.E., o=Hancock Associates, ou=Engineering, c=US, email=jpeznola@hancockassociates.com
Reason: I am the author of this document
Date: 2025.08.08 08:40:00-05'00'

NO.	BY	APP	DATE	ISSUE/REVISION DESCRIPTION

DATE:	8/15/25	DESIGN BY:	DJR
SCALE:	1"=20'	DRAWN BY:	DJR
APPRVD. BY:	JP	CHECK BY:	BGG

DETAILS SHEET 1

PLOT DATE: Aug 15, 2025 8:40 am
Path: V:\Jobs\25\25 30 Projects\25337B - Brody - Medway\Dwg\DWG\

DWG: 25337SP.dwg
LAYOUT: 11DET1
SHEET: 11 OF 13

DET1

PROJECT NO.: 25337

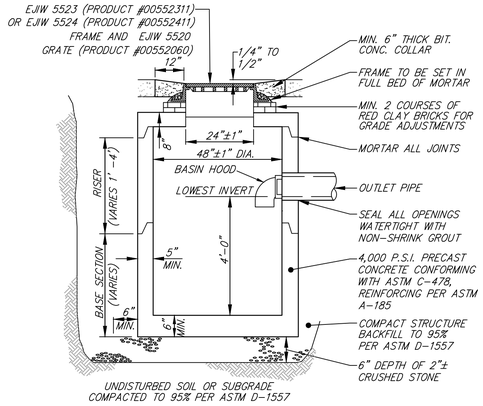

NOTE: CONICAL TOP MAY ALSO BE USED.

CATCH BASIN WITH HOOD

TYPICAL CROSS SECTION

NOT TO SCALE

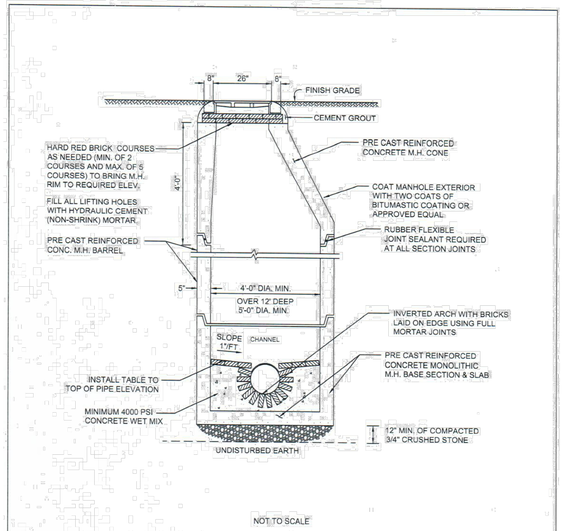

NOT TO SCALE

NOTES:
1. TYPICAL SANITARY MANHOLE TO BE 4 FEET IN DIAMETER.
2. 5'-0" DIAMETER FOR ALL MANHOLE DEPTHS GREATER THAN 12 FEET OR WHEN ORDERED BY THE ENGINEER.
3. 6" MIN. WALL THICKNESS AND 7" MIN. BASE THICKNESS WITH 5'-0" DIAMETER MANHOLES.
4. INNER EDGE OF BRICK TABLE TO BE AT ELEVATION OF CROWN OF TOP OF PIPE.
5. DESIGN LOAD - HS20.
6. ALL INVERTS SHALL BE 4,000 PSI CEMENT CONCRETE IN VOID AREAS AND RED SEWER BRICK CONSTRUCTION.
7. INVERTS SHALL NOT BE BUILT ABOVE GRADE. ALL INVERTS SHALL BE BUILT IN PLACE WITH ALL PIPES INSTALLED.

Town of MEDWAY DEPARTMENT OF PUBLIC SERVICES	TYPICAL SEWER MANHOLE	DATE: JULY 2016 REV: 0	DETAIL NO. S-01

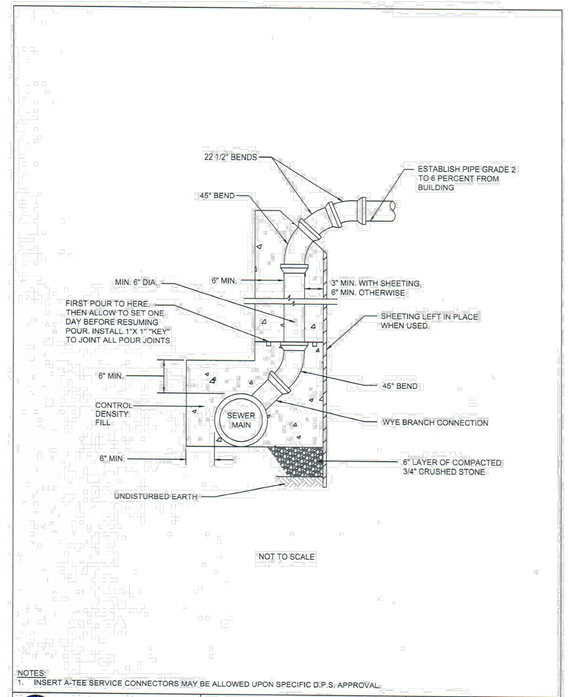

NOT TO SCALE

NOTES:
1. INSERT A-TEE SERVICE CONNECTORS MAY BE ALLOWED UPON SPECIFIC D.P.S. APPROVAL.

Town of MEDWAY DEPARTMENT OF PUBLIC SERVICES	CHIMNEY	DATE: JULY 2016 REV: 0	DETAIL NO. S-10

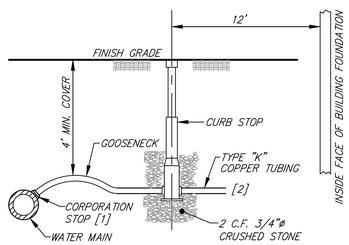

NOTES:
[1] WATER SERVICES LARGER THAN ONE INCH ARE TO BE RESTRAINED TO MAIN WITH APPROVED SADDLE.
[2] COORDINATE BUILDING CONNECTION WITH PLUMBING DRAWINGS.

WATER SERVICE

TYPICAL PROFILE

NOT TO SCALE

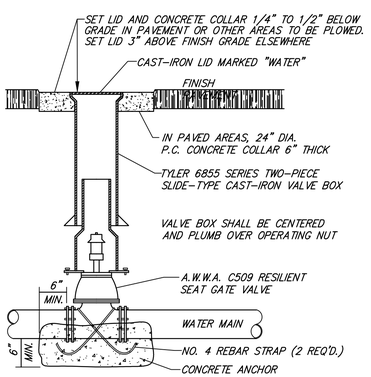

GATE VALVE

TYPICAL CROSS SECTION

NOT TO SCALE

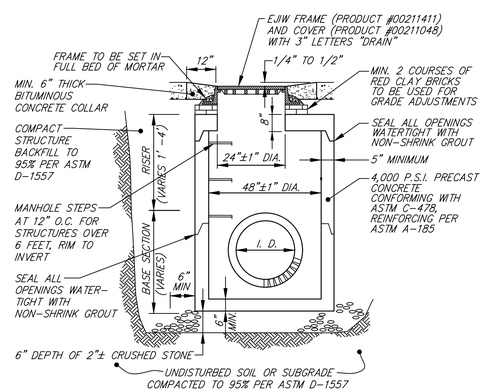

NOTE: CONICAL TOP MAY ALSO BE USED

DRAIN MANHOLE

TYPICAL CROSS SECTION

NOT TO SCALE

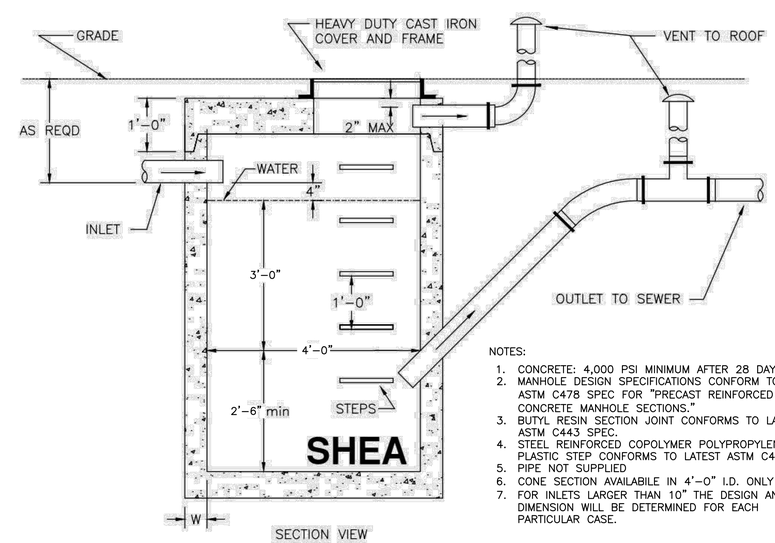

SECTION VIEW

NOTES:
1. CONCRETE: 4,000 PSI MINIMUM AFTER 28 DAYS.
2. MANHOLE DESIGN SPECIFICATIONS CONFORM TO LATEST ASTM C478 SPEC FOR "PRECAST REINFORCED CONCRETE MANHOLE SECTIONS."
3. BUTYL RESIN SECTION JOINT CONFORMS TO LATEST ASTM C443 SPEC.
4. STEEL REINFORCED COPOLYMER POLYPROPYLENE PLASTIC STEP CONFORMS TO LATEST ASTM C478 SPEC.
5. PIPE NOT SUPPLIED
6. CONE SECTION AVAILABILE IN 4'-0" I.D. ONLY
7. FOR INLETS LARGER THAN 10" THE DESIGN AND DIMENSION WILL BE DETERMINED FOR EACH PARTICULAR CASE.

OIL AND GREASE SEPARATOR

NOT TO SCALE

PERMIT SITE PLAN

39 West Street
Medway, MA 02053

ASSESSORS:

MAP	PARCEL
55	51

PREPARED FOR:

STEVEN G. BRODY

39 West Street
Medway, MA 02053

HANCOCK ASSOCIATES

Civil Engineers

Land Surveyors

Wetland Scientists

315 ELM STREET, MARLBOROUGH, MA 01752
VOICE (508) 460-1111, FAX (508) 460-1121
WWW.HANCOCKASSOCIATES.COM

COMMONWEALTH OF MASSACHUSETTS — JOSEPH D. PEZNOLA — CIVIL — No. 38117 — REGISTERED PROFESSIONAL ENGINEER

Joseph D. Peznola P.E.

NO.	BY	APP	DATE	ISSUE/REVISION DESCRIPTION

DATE:	8/15/25	DESIGN BY:	DJR
SCALE:	1"=20'	DRAWN BY:	DJR
APPRVD. BY:	JP	CHECK BY:	BGG

DETAILS SHEET 2

PLOT DATE: Aug 15, 2025 8:40 am
PATH: V:\Jobs\ptbk\Dwl 3D Projects\25337S - Brody - Medway\Dwg\DWG\

DWG: 25337SP.dwg	DET2
LAYOUT: 12DET2	
SHEET: 12 OF 13	
PROJECT NO.:	25337

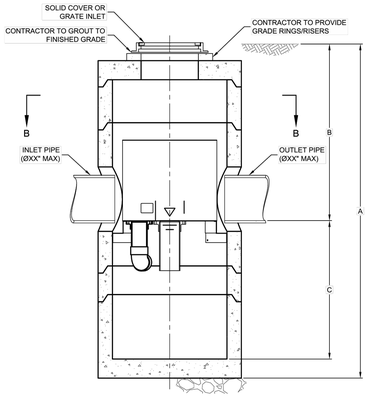

SECTION A-A

VORTSENTRY HS GENERAL INFORMATION														
Model	Manhole Diameter (ID)		Total Treatment Flow Rate		Typical Total Distance Rim to Outside Bottom A		Typical Distance Rim to Invert B		Typical Depth Below Invert (inside) C		Approximate Minimum Distance Rim to Invert		Maximum Pipe Diameter (ID)	
	FT	mm	CFS	L/S	FT	m	FT	m	FT	mm	FT	m	IN	mm
HS36	3	900	0.55	15.6	10.16	3.10	4.08	1.24	5.58	1702	3.00	0.91	18	450
HS48	4	1200	1.20	34.0	13.25	4.04	6.00	1.83	6.75	2057	4.00	1.22	24	600
HS60	5	1500	2.20	62.3	15.13	4.61	6.50	1.98	7.96	2426	4.82	1.47	30	750
HS72	6	1800	3.70	104.8	16.56	5.05	6.75	2.06	9.15	2788	5.59	1.70	36	900
HS84	7	2100	5.60	158.6	18.85	5.75	7.75	2.36	10.35	3156	5.00	1.52	42	1050
HS96	8	2400	8.10	229.4	20.87	6.36	8.50	2.59	11.54	3518	6.91	2.11	48	1200

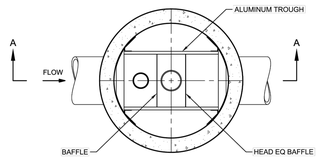

PLAN VIEW B-B

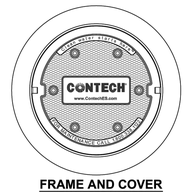

FRAME AND COVER
(DIAMETER VARIES)
N.T.S.

GENERAL NOTES
1. CONTECH TO PROVIDE ALL MATERIALS UNLESS NOTED OTHERWISE.
2. DIMENSIONS MARKED WITH ( ) ARE REFERENCE DIMENSIONS. ACTUAL DIMENSIONS MAY VARY.
3. FOR FABRICATION DRAWINGS WITH DETAILED STRUCTURE DIMENSIONS AND WEIGHT, PLEASE CONTACT YOUR CONTECH ENGINEERED SOLUTIONS LLC REPRESENTATIVE. www.ContechES.com
4. VORTSENTRY HS WATER QUALITY STRUCTURE SHALL BE IN ACCORDANCE WITH ALL DESIGN DATA AND INFORMATION CONTAINED IN THIS DRAWING.
5. STRUCTURE SHALL MEET AASHTO HS20 AND CASTINGS SHALL MEET AASHTO M306 LOAD RATING, ASSUMING GROUNDWATER ELEVATION AT, OR BELOW, THE OUTLET PIPE INVERT ELEVATION. ENGINEER OF RECORD TO CONFIRM ACTUAL GROUNDWATER ELEVATION.

INSTALLATION NOTES
1. ANY SUB-BASE, BACKFILL DEPTH, AND/OR ANTI-FLOTATION PROVISIONS ARE SITE-SPECIFIC DESIGN CONSIDERATIONS AND SHALL BE SPECIFIED BY ENGINEER OF RECORD.
2. CONTRACTOR TO PROVIDE EQUIPMENT WITH SUFFICIENT LIFTING AND REACH CAPACITY TO LIFT AND SET THE VORTSENTRY HS MANHOLE STRUCTURE (LIFTING CLUTCHES PROVIDED).
3. CONTRACTOR TO INSTALL JOINT SEALANT BETWEEN ALL STRUCTURE SECTIONS AND ASSEMBLE STRUCTURE.
4. CONTRACTOR TO PROVIDE, INSTALL, AND GROUT PIPES. MATCH PIPE INVERTS WITH ELEVATIONS SHOWN.
5. CONTRACTOR TO TAKE APPROPRIATE MEASURES TO ASSURE UNIT IS WATER TIGHT, HOLDING WATER TO FLOWLINE INVERT MINIMUM. IT IS SUGGESTED THAT ALL JOINTS BELOW PIPE INVERTS ARE GROUTED.

CONTECH VORTSENTRY HS36 STANDARD DETAIL
NOT TO SCALE

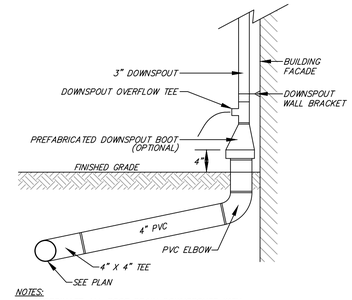

NOTES:
1. COORDINATE ALL ROOF DRAIN DOWNSPOUTS WITH ARCHITECTURAL DRAWINGS.

ROOF DRAIN CONNECTION
NOT TO SCALE

INSERTA TEE DETAIL
NTS

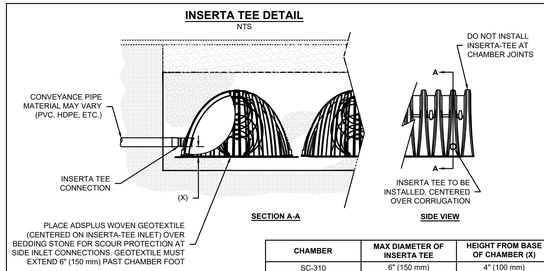

CHAMBER	MAX DIAMETER OF INSERTA TEE	HEIGHT FROM BASE OF CHAMBER (X)
SC-310	6" (150 mm)	4" (100 mm)
SC-740	10" (250 mm)	4" (100 mm)
SC-800	10" (250 mm)	4" (100 mm)
DC-780	10" (250 mm)	4" (100 mm)
MC-3500	12" (300 mm)	6" (150 mm)
MC-4500	12" (300 mm)	8" (200 mm)
MC-7200	12" (300 mm)	8" (200 mm)
INSERTA TEE FITTINGS AVAILABLE FOR SDR 26, SDR 35, SCH 40 IPS GASKETED & SOLVENT WELD, N-12, HP STORM, C-900 OR DUCTILE IRON		

NOTES:
- PART NUMBERS WILL VARY BASED ON INLET PIPE MATERIALS. CONTACT STORMTECH FOR MORE INFORMATION.
- CONTACT ADS ENGINEERING SERVICES IF INSERTA TEE INLET MUST BE RAISED AS NOT ALL INVERTS ARE POSSIBLE.

INSERTA-TEE SIDE INLET DETAIL

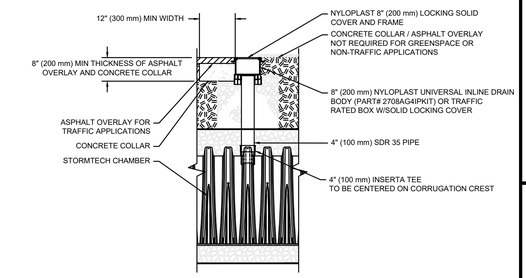

NOTE:
INSPECTION PORTS MAY BE CONNECTED THROUGH ANY CHAMBER CORRUGATION CREST.

4" PVC INSPECTION PORT DETAIL (SC SERIES CHAMBER)
NTS

4" PVC INSPECTION PORT DETAIL (SC SERIES CHAMBER)

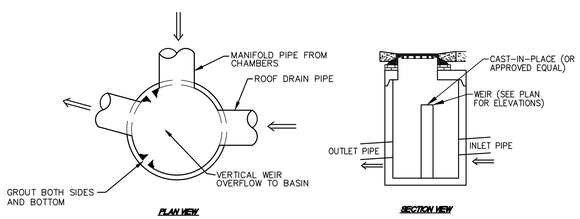

DMH 6 WEIR MANHOLE
NOT TO SCALE

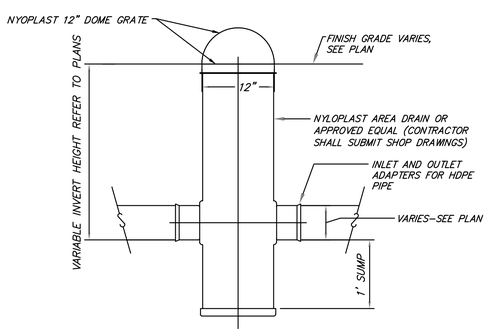

TYPICAL CROSS SECTION

AREA DRAIN (AD)
NOT TO SCALE

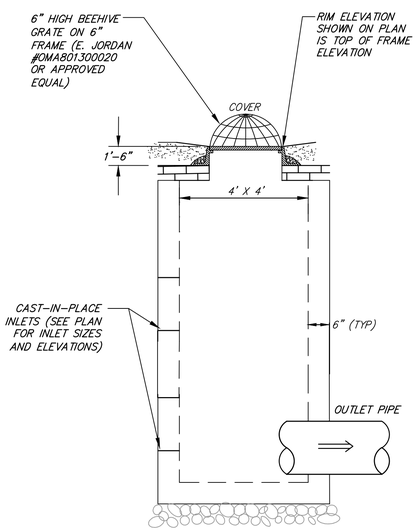

TYPICAL CROSS-SECTION

SITE 2 DETENTION/INFILTRATION BASIN OUTLET CONTROL STRUCTURE
NOT TO SCALE

ACCEPTABLE FILL MATERIALS: STORMTECH DC-780 CHAMBER SYSTEMS

MATERIAL LOCATION		DESCRIPTION	AASHTO MATERIAL CLASSIFICATIONS	COMPACTION / DENSITY REQUIREMENT
D	**FINAL FILL:** FILL MATERIAL FOR LAYER 'D' STARTS FROM THE TOP OF THE 'C' LAYER TO THE BOTTOM OF FLEXIBLE PAVEMENT OR UNPAVED FINISHED GRADE ABOVE. NOTE THAT PAVEMENT SUBBASE MAY BE PART OF THE 'D' LAYER	ANY SOIL/ROCK MATERIALS, NATIVE SOILS, OR PER ENGINEER'S PLANS. CHECK PLANS FOR PAVEMENT SUBGRADE REQUIREMENTS.	N/A	PREPARE PER SITE DESIGN ENGINEER'S PLANS. PAVED INSTALLATIONS MAY HAVE STRINGENT MATERIAL AND PREPARATION REQUIREMENTS.
C	**INITIAL FILL:** FILL MATERIAL FOR LAYER 'C' STARTS FROM THE TOP OF THE EMBEDMENT STONE ('B' LAYER) TO 18" (450 mm) ABOVE THE TOP OF THE CHAMBER. NOTE THAT PAVEMENT SUBBASE MAY BE A PART OF THE 'C' LAYER.	GRANULAR WELL-GRADED SOIL/AGGREGATE MIXTURES, <35% FINES OR PROCESSED AGGREGATE. MOST PAVEMENT SUBBASE MATERIALS CAN BE USED IN LIEU OF THIS LAYER.	AASHTO M145[1] A-1, A-2-4, A-3 OR AASHTO M43[3] 3, 357, 4, 467, 5, 56, 57, 6, 67, 68, 7, 78, 8, 89, 9, 10	BEGIN COMPACTIONS AFTER 12" (300 mm) OF MATERIAL OVER THE CHAMBERS IS REACHED. COMPACT ADDITIONAL LAYERS IN 6" (150 mm) MAX LIFTS TO A MIN. 95% PROCTOR DENSITY FOR WELL GRADED MATERIAL AND 95% RELATIVE DENSITY FOR PROCESSED AGGREGATE MATERIALS. ROLLER GROSS VEHICLE WEIGHT NOT TO EXCEED 12,000 lbs (53 kN). DYNAMIC FORCE NOT TO EXCEED 20,000 lbs (89 kN).
B	**EMBEDMENT STONE:** FILL SURROUNDING THE CHAMBERS FROM THE FOUNDATION STONE ('A' LAYER) TO THE 'C' LAYER ABOVE.	CLEAN, CRUSHED, ANGULAR STONE OR RECYCLED CONCRETE[5]	AASHTO M43[3] 3, 357, 4, 467, 5, 56, 57	NO COMPACTION REQUIRED.
A	**FOUNDATION STONE:** FILL BELOW CHAMBERS FROM THE SUBGRADE UP TO THE FOOT (BOTTOM) OF THE CHAMBER.	CLEAN, CRUSHED, ANGULAR STONE OR RECYCLED CONCRETE[5]	AASHTO M43[3] 3, 357, 4, 467, 5, 56, 57	PLATE COMPACT OR ROLL TO ACHIEVE A FLAT SURFACE.[2,3]

PLEASE NOTE:
1. THE LISTED AASHTO DESIGNATIONS ARE FOR GRADATIONS ONLY. THE STONE MUST ALSO BE CLEAN, CRUSHED, ANGULAR. FOR EXAMPLE, A SPECIFICATION FOR #4 STONE WOULD STATE: "CLEAN, CRUSHED, ANGULAR NO. 4 (AASHTO M43) STONE".
2. STORMTECH COMPACTION REQUIREMENTS ARE MET FOR 'A' LOCATION MATERIALS WHEN PLACED AND COMPACTED IN 9" (230 mm) (MAX) LIFTS USING TWO FULL COVERAGES WITH A VIBRATORY COMPACTOR.
3. WHERE INFILTRATION SURFACES MAY BE COMPROMISED BY COMPACTION, FOR STANDARD DESIGN LOAD CONDITIONS, A FLAT SURFACE MAY BE ACHIEVED BY RAKING OR DRAGGING WITHOUT COMPACTION EQUIPMENT. FOR SPECIAL LOAD DESIGNS, CONTACT STORMTECH FOR COMPACTION REQUIREMENTS.
4. ONCE LAYER 'C' IS PLACED, ANY SOIL/MATERIAL CAN BE PLACED IN LAYER 'D' UP TO THE FINISHED GRADE. MOST PAVEMENT SUBBASE SOILS CAN BE USED TO REPLACE THE MATERIAL REQUIREMENTS OF LAYER 'C' OR 'D' AT THE SITE DESIGN ENGINEER'S DISCRETION.
5. WHERE RECYCLED CONCRETE AGGREGATE IS USED IN LAYERS 'A' OR 'B' THE MATERIAL SHOULD ALSO MEET THE ACCEPTABILITY CRITERIA OUTLINED IN TECHNICAL NOTE 6.20 "RECYCLED CONCRETE STRUCTURAL BACKFILL".

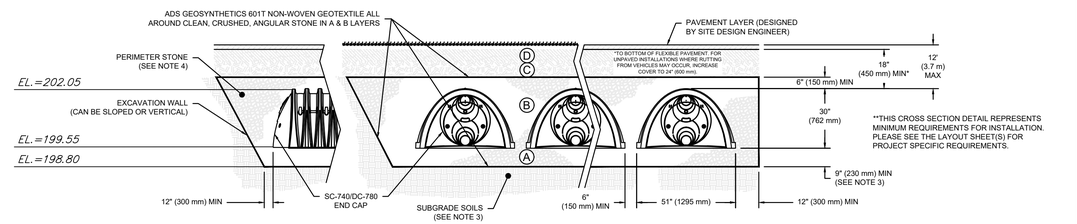

**THIS CROSS SECTION DETAIL REPRESENTS MINIMUM REQUIREMENTS FOR INSTALLATION. PLEASE SEE THE LAYOUT SHEET(S) FOR PROJECT SPECIFIC REQUIREMENTS.

NOTES:
1. CHAMBERS SHALL MEET THE REQUIREMENTS OF ASTM F2418, "STANDARD SPECIFICATION FOR POLYPROPYLENE (PP) CORRUGATED WALL STORMWATER COLLECTION CHAMBERS".
2. DC-780 CHAMBERS SHALL BE DESIGNED IN ACCORDANCE WITH ASTM F2787 "STANDARD PRACTICE FOR STRUCTURAL DESIGN OF THERMOPLASTIC CORRUGATED WALL STORMWATER COLLECTION CHAMBERS".
3. THE SITE DESIGN ENGINEER IS RESPONSIBLE FOR ASSESSING THE BEARING RESISTANCE (ALLOWABLE BEARING CAPACITY) OF THE SUBGRADE SOILS AND THE DEPTH OF FOUNDATION STONE WITH CONSIDERATION FOR THE RANGE OF EXPECTED SOIL MOISTURE CONDITIONS. REFERENCE STORMTECH DESIGN MANUAL FOR BEARING CAPACITY GUIDANCE.
4. PERIMETER STONE MUST BE EXTENDED HORIZONTALLY TO THE EXCAVATION WALL FOR BOTH VERTICAL AND SLOPED EXCAVATION WALLS.
5. REQUIREMENTS FOR HANDLING AND INSTALLATION:
   - TO MAINTAIN THE WIDTH OF CHAMBERS DURING SHIPPING AND HANDLING, CHAMBERS SHALL HAVE INTEGRAL, INTERLOCKING STACKING LUGS.
   - TO ENSURE A SECURE JOINT DURING INSTALLATION AND BACKFILL, THE HEIGHT OF THE CHAMBER JOINT SHALL NOT BE LESS THAN 2".
   - TO ENSURE THE INTEGRITY OF THE ARCH SHAPE DURING INSTALLATION, a) THE ARCH STIFFNESS CONSTANT AS DEFINED IN SECTION 6.2.8 OF ASTM F2418 SHALL BE GREATER THAN OR EQUAL TO 500 LBS/FT/%. AND b) TO RESIST CHAMBER DEFORMATION DURING INSTALLATION AT ELEVATED TEMPERATURES (ABOVE 73° F / 23° C), CHAMBERS SHALL BE PRODUCED FROM REFLECTIVE GOLD OR YELLOW COLORS.

DC-780 CROSS SECTION DETAIL

PERMIT SITE PLAN

39 West Street
Medway, MA 02053

ASSESSORS:

MAP	PARCEL
55	51

PREPARED FOR:

STEVEN G. BRODY

39 West Street
Medway, MA 02053

HANCOCK ASSOCIATES

Civil Engineers

Land Surveyors

Wetland Scientists

315 ELM STREET, MARLBOROUGH, MA 01752
VOICE (508) 460-1111, FAX (508) 460-1121
WWW.HANCOCKASSOCIATES.COM

COMMONWEALTH OF MASSACHUSETTS
JOSEPH D. PEZNOLA
CIVIL
No. 38117
REGISTERED PROFESSIONAL ENGINEER

Joseph D. Peznola P.E.

Digitally signed by Joseph D. Peznola P.E.
DN: cn=Joseph D. Peznola P.E., o=Hancock Associates, ou=Civil, email=jpeznola@hancockassociates.com, c=US
Date: 2025.08.15 08:12:14 -05'00'

NO.	BY	APP	DATE	ISSUE/REVISION DESCRIPTION

DATE:	8/15/25	DESIGN BY:	DJR
SCALE:	1"=20'	DRAWN BY:	DJR
APPRVD. BY:	JP	CHECK BY:	BGG

DETAILS SHEET 3

PLOT DATE: Aug 15, 2025 8:41 am
Path: V:\Def\Gdi\JN 30 Projects\25337B - Brody - Medway\Dwg\DWG\

DWG: 25337SP.dwg
LAYOUT: 13DET3
SHEET: 13 OF 13

DET3

PROJECT NO.: 25337